US Department of Transportation
Federal Aviation Administration

MAJOR REPAIR AND ALTERATION
(Airframe, Powerplant, Propeller, or Appliance)

OMB No. 2120-0020
Exp: 5/31/2018

Electronic Tracking Number

For FAA Use Only

INSTRUCTIONS: Print or type all entries. See Title 14 CFR §43.9, Part 43 Appendix B, and AC 43.9-1 (or subsequent revision thereof) for instructions and disposition of this form. This report is required by law (49 U.S.C. §44701). Failure to report can result in a civil penalty for each such violation. (49 U.S.C. §46301(a))

1. Aircraft	Nationality and Registration Mark: N98624	Serial No.: 340A-0064	
	Make: Cessna	Model: 340A	Series:
2. Owner	Name *(As shown on registration certificate)*: Darrell D Holmstrom	Address *(As shown on registration certificate)*: Address 3020 Brittany Pl; City Anchorage; State AK; Zip 99504; Country USA	

3. For FAA Use Only

4. Type		5. Unit Identification			
Repair	Alteration	Unit	Make	Model	Serial No.
☐	☒	AIRFRAME	Cessna	*(As described in Item 1 above)*	340A-0064
☐	☐	POWERPLANT			
☐	☐	PROPELLER			
☐	☐	APPLIANCE	Type / Manufacturer		

6. Conformity Statement

A. Agency's Name and Address	B. Kind of Agency	
Name: Darrell D Holmstrom	x U. S. Certificated Mechanic	☐ Manufacturer
Address: 3020 Brittany Pl	☐ Foreign Certificated Mechanic	C. Certificate No.
City: Anchorage State: AK	☐ Certificated Repair Station	2695973
Zip: 99504 Country: USA	☐ Certificated Maintenance Organization	

D. I certify that the repair and/or alteration made to the unit(s) identified in item 5 above and described on the reverse or attachments hereto have been made in accordance with the requirements of Part 43 of the U.S. Federal Aviation Regulations and that the information furnished herein is true and correct to the best of my knowledge.

Extended range fuel per 14 CFR Part 43 App. B ☐

Signature/Date of Authorized Individual: 09/28/2019

7. Approval for Return to Service

Pursuant to the authority given persons specified below, the unit identified in item 5 was inspected in the manner prescribed by the Administrator of the Federal Aviation Administration and is ☒ Approved ☐ Rejected

BY								
	☐	FAA Flt. Standards Inspector	☐	Manufacturer	☐	Maintenance Organization	☐	Persons Approved by Canadian Department of Transport
	☐	FAA Designee	☐	Repair Station	X	Inspection Authorization		Other *(Specify)*

Certificate or Designation No. 2695973

Signature/Date of Authorized Individual: 09/28/2019

FAA Form 337 (10/06)

NOTICE

Weight and balance or operating limitation changes shall be entered in the appropriate aircraft record. An alteration must be compatible with all previous alterations to assure continued conformity with the applicable airworthiness requirements.

8. Description of Work Accomplished
(If more space is required, attach additional sheets. Identify with aircraft nationality and registration mark and date work completed.)

N98624	09/28/2019
Nationality and Registration Mark	Date

Installed BCN Aerospace Airstair Door Saver Kit in accordance with BCN Aerospace installation drawing 10039CC dated 6 June 18. STC SA2440SW. Weight and balanced revised. end///

☐ Additional Sheets Are Attached

US Department of Transportation
Federal Aviation Administration

MAJOR REPAIR AND ALTERATION
(Airframe, Powerplant, Propeller, or Appliance)

OMB No. 2120-0020
Exp: 5/31/2018

Electronic Tracking Number

For FAA Use Only

INSTRUCTIONS: Print or type all entries. See Title 14 CFR §43.9, Part 43 Appendix B, and AC 43.9-1 (or subsequent revision thereof) for instructions and disposition of this form. This report is required by law (49 U.S.C. §44701). Failure to report can result in a civil penalty for each such violation. (49 U.S.C. §46301(a))

1. Aircraft	Nationality and Registration Mark: N98624	Serial No.: 340A-0064	
	Make: Cessna	Model: 340A	Series:
2. Owner	Name *(As shown on registration certificate)*: Darrell D Holmstrom	Address *(As shown on registration certificate)*: Address 3020 Brittany Pl; City Anchorage; State AK; Zip 99504; Country USA	

3. For FAA Use Only

4. Type		5. Unit Identification			
Repair	Alteration	Unit	Make	Model	Serial No.
☐	☒	AIRFRAME	Cessna	*(As described in Item 1 above)*	340A-0064
☐	☐	POWERPLANT			
☐	☐	PROPELLER			
☐	☐	APPLIANCE	Type / Manufacturer		

6. Conformity Statement

A. Agency's Name and Address	B. Kind of Agency	
Name: Darrell D Holmstrom	x U. S. Certificated Mechanic	☐ Manufacturer
Address: 3020 Brittany Pl	☐ Foreign Certificated Mechanic	C. Certificate No.
City: Anchorage; State: AK	☐ Certificated Repair Station	2695973
Zip: 99504; Country: USA	☐ Certificated Maintenance Organization	

D. I certify that the repair and/or alteration made to the unit(s) identified in item 5 above and described on the reverse or attachments hereto have been made in accordance with the requirements of Part 43 of the U.S. Federal Aviation Regulations and that the information furnished herein is true and correct to the best of my knowledge.

Extended range fuel per 14 CFR Part 43 App. B ☐

Signature/Date of Authorized Individual: 09/28/2019

7. Approval for Return to Service

Pursuant to the authority given persons specified below, the unit identified in item 5 was inspected in the manner prescribed by the Administrator of the Federal Aviation Administration and is ☒ Approved ☐ Rejected

BY								
	☐	FAA Flt. Standards Inspector	☐	Manufacturer	☐	Maintenance Organization	☐	Persons Approved by Canadian Department of Transport
	☐	FAA Designee	☐	Repair Station	X	Inspection Authorization		Other *(Specify)*

Certificate or Designation No. 2695973

Signature/Date of Authorized Individual: 09/28/2019

FAA Form 337 (10/06)

NOTICE

Weight and balance or operating limitation changes shall be entered in the appropriate aircraft record. An alteration must be compatible with all previous alterations to assure continued conformity with the applicable airworthiness requirements.

8. Description of Work Accomplished
(If more space is required, attach additional sheets. Identify with aircraft nationality and registration mark and date work completed.)

N98624	09/28/2019
Nationality and Registration Mark	Date

Installed Brackett Air Filters BA-109 in accordance with STC SA71GL and instruction sheet 109-5 dated 07-29-04. Negligibile change in weight and balance. \\
end//

☐ Additional Sheets Are Attached

U.S Department of Transportation
Federal Aviation Administration

MAJOR REPAIR AND ALTERATION
(Airframe, Powerplant, Propeller, or Appliance)

Form Approved
OMB No. 2120-0020

For FAA Use Only

Office Identification

INSTRUCTIONS: Print or type all entries. See FAR 43.9, FAR 43 Appendix B, and AC 43.9-1 (or subsequent revision thereof) for instructions and disposition of this form. This report is required by law (49 U.S.C. 1421). Failure to report can result in a civil penalty not to exceed $1,000 for each such violation (Section 901 Federal Aviation Act 1958)

1. Aircraft	Make CESSNA	Model 340A
	Serial No. 340A-0064	Nationality and Registration Mark N98624
2. Owner	Name *(As shown on registration certificate)* MILE HIGH AVIATION LLC	Address *(As shown on registration certificate)* 8620 N NEW BRAUNFELS AVE STE 422 SAN ANTONIO , TX 78217-6362

3. For FAA Use Only

4. Unit Identification				5. Type	
Unit	Make	Model	Serial No.	Repair	Alteration
AIRFRAME	——————(*As described in item 1 above*)——————				X
POWERPLANT					
PROPELLER					
APPLIANCE	Type Manufacturer				

6. Conformity Statement

A. Agency's Name and Address	B. Kind of Agency	C. Certificate No.
AVIONICS SERVICES INTL.,INC. 4317 MAHER ST. LAREDO TX. 78041	☐ U.S. Certificated Mechanic ☐ Foreign Certificated Mechanic X Certificated Repair Station ☐ Manufacturer	CRS. S78R151N

D. I certify that the repair and/or alteration made to the unit(s) identified in item 4 above and described on the reverse or attachments hereto have been made in accordance with the requirements of Part 43 of the U.S. Federal Aviation Regulations and that the information furnished herein is true and correct to the best of my knowledge.

Date JUNE 2 2009	Signature of Authorized Individual

7. Approval for Return to Service

Pursuant to the authority given persons specified below, the unit identified in item 4 was inspected in the manner prescribed by the Administrator of the Federal Aviation Administration and is ☒ APPROVED ☐ REJECTED

BY		FAA Flt Standards Inspector		Manufacturer	Inspection Authorization	Other *(Specify)*
		FAA Designee	x	Repair Station	Person Approved by Transport Canada Airworthiness Group	

Date of Approval or Rejection 6/3/09	Certificate or Designation No. CRS.S78R151N	Signature of Authorized Individual

FAA Form 337 (12-88)

NOTICE

Weight and balance or operating limitation changes shall be entered in the appropriate aircraft record. An alteration must be compatible with all previous alterations to assure continued conformity with the applicable airworthiness requirements.

8. Description of Work Accomplished

(If more space is required, attach additional sheets. Identify with aircraft nationality and registration mark and date work completed.)

THIS **FAA** FORM **337** IS TO CERTIFY THE GNS 530W AND GNS 430W FOR **IFR OPERATION STC SA01933 LA**

VERIFIED THAT THE TWO GARMIN GNS 530 AND GARMIN GNS 430 WAS INSTALLED IN ACCORDANCE WITH THE MANUFACTURE'S INSTALLATION MANUAL AS ENTERED IN VFR 337'S DATE MAY 30 2009 OF THIS AIRCRAFT.

A FLIGHT TEST WAS PERFORMED ON MAY 31 2009 FOR THE TWO UNITS AND FOUND TO MEET ACCURACY REQUIREMENT. AC20-130A/ AC20-138A.
THIS CERTIFIES THE AIRCRAFT FOR IFR EN ROUTE , APPROACH TRANSITION AND NON PRECISION APPROACH.

REMOVED PLACARD STATING **"GPS NOT APPROVED FOR IFR"**

FAA APPROVED FLIGHT MANUAL SUPPLEMENT GNS430W P/N 190-00356-03 REV. A NOV. 20 2007 . AND GNS 530W P/N 190-00357-03 REV. A NOV 20 2007 IS REQUIRED FOR THIS APPROVAL AND MUST BE INSTALLED IN THE APPROVED AIRCRAFT FLIGHT MANUAL OR OPERATION'S HANDBOOK AND MUST BE AVAILABLE TO THE FLIGHT CREW DURING ALL OPERATIONS.

----------END----------

☒ Additional Sheets Are Attached

US Department of Transportation
Federal Aviation Administration

MAJOR REPAIR AND ALTERATION
(Airframe, Powerplant, Propeller, or Appliance)

OMB No. 2120-0020
Exp: 8/31/2014

Electronic Tracking Number

For FAA Use Only

INSTRUCTIONS: Print or type all entries. See Title 14 CFR §43.9, Part 43 Appendix B, and AC 43.9-1 (or subsequent revision thereof) for instructions and disposition of this form. This report is required by law (49 U.S.C. §44701). Failure to report can result in a civil penalty for each such violation. (49 U.S.C. §46301(a))

1. Aircraft	Nationality and Registration Mark: N98624	Serial No.: 340A-0064	
	Make: CESSNA	Model: 340A	Series:
2. Owner	Name *(As shown on registration certificate)*: Darrell D Holmstrom	Address *(As shown on registration certificate)*: Address: 3020 Brittany Pl; City: Anchorage; State: AK; Zip: 99504; Country: USA	

3. For FAA Use Only

4. Type		5. Unit Identification			
Repair	Alteration	Unit	Make	Model	Serial No.
☐	☒	AIRFRAME	—	*(As described in Item 1 above)*	—
☐	☐	POWERPLANT			
☐	☐	PROPELLER			
☐	☐	APPLIANCE	Type / Manufacturer		

6. Conformity Statement

A. Agency's Name and Address

Name: Darrell D Holmstrom
Address: 3020 Brittany Pl
City: Anchorage State: AK
Zip: 99504 Country: USA

B. Kind of Agency

x	U. S. Certificated Mechanic		Manufacturer
	Foreign Certificated Mechanic	C. Certificate No.	
	Certificated Repair Station	2695973	
	Certificated Maintenance Organization		

D. I certify that the repair and/or alteration made to the unit(s) identified in item 5 above and described on the reverse or attachments hereto have been made in accordance with the requirements of Part 43 of the U.S. Federal Aviation Regulations and that the information furnished herein is true and correct to the best of my knowledge.

Extended range fuel per 14 CFR Part 43 App. B ☐

Signature/Date of Authorized Individual: 10/13/2016

7. Approval for Return to Service

Pursuant to the authority given persons specified below, the unit identified in item 5 was inspected in the manner prescribed by the Administrator of the Federal Aviation Administration and is ☒ Approved ☐ Rejected

BY								
		FAA Flt. Standards Inspector		Manufacturer		Maintenance Organization		Persons Approved by Canadian Department of Transport
		FAA Designee		Repair Station	X	Inspection Authorization		Other *(Specify)*

Certificate or Designation No. 2695973

Signature/Date of Authorized Individual: 10/14/2016

FAA Form 337 (10/06)

NOTICE

Weight and balance or operating limitation changes shall be entered in the appropriate aircraft record. An alteration must be compatible with all previous alterations to assure continued conformity with the applicable airworthiness requirements.

8. Description of Work Accomplished
(If more space is required, attach additional sheets. Identify with aircraft nationality and registration mark and date work completed.)

N98624	10/13/2016
Nationality and Registration Mark	Date

Aircraft s/n 340A-0064 Hobbs 939.0
Aircraft modified by installation of American Aviation,Inc cowl scoops in accordance with American Aviation Inc Top Drawing list TDL 063 Revision G dated 05/04/1993. Weight and Balance revised.
End//

☐ Additional Sheets Are Attached

US Department of Transportation
Federal Aviation Administration

MAJOR REPAIR AND ALTERATION
(Airframe, Powerplant, Propeller, or Appliance)

OMB No. 2120-0020
Exp: 8/31/2014

Electronic Tracking Number

For FAA Use Only

INSTRUCTIONS: Print or type all entries. See Title 14 CFR §43.9, Part 43 Appendix B, and AC 43.9-1 (or subsequent revision thereof) for instructions and disposition of this form. This report is required by law (49 U.S.C. §44701). Failure to report can result in a civil penalty for each such violation. (49 U.S.C. §46301(a))

1. Aircraft	Nationality and Registration Mark: N98624	Serial No.: 340A-0064	
	Make: CESSNA	Model: 340A	Series:
2. Owner	Name *(As shown on registration certificate)*: Darrell D Holmstrom	Address *(As shown on registration certificate)*: Address: 3020 Brittany Pl; City: Anchorage; State: AK; Zip: 99504; Country: USA	

3. For FAA Use Only

4. Type		5. Unit Identification			
Repair	Alteration	Unit	Make	Model	Serial No.
☐	☒	AIRFRAME	—	*(As described in Item 1 above)*	—
☐	☐	POWERPLANT			
☐	☐	PROPELLER			
☐	☐	APPLIANCE	Type / Manufacturer		

6. Conformity Statement

A. Agency's Name and Address	B. Kind of Agency	
Name: Darrell D Holmstrom	x U. S. Certificated Mechanic	Manufacturer
Address: 3020 Brittany Pl	Foreign Certificated Mechanic	C. Certificate No.
City: Anchorage State: AK	Certificated Repair Station	2695973
Zip: 99504 Country: USA	Certificated Maintenance Organization	

D. I certify that the repair and/or alteration made to the unit(s) identified in item 5 above and described on the reverse or attachments hereto have been made in accordance with the requirements of Part 43 of the U.S. Federal Aviation Regulations and that the information furnished herein is true and correct to the best of my knowledge.

Extended range fuel per 14 CFR Part 43 App. B ☐

Signature/Date of Authorized Individual: 10/13/2016

7. Approval for Return to Service

Pursuant to the authority given persons specified below, the unit identified in item 5 was inspected in the manner prescribed by the Administrator of the Federal Aviation Administration and is ☒ Approved ☐ Rejected

BY								
		FAA Flt. Standards Inspector		Manufacturer		Maintenance Organization		Persons Approved by Canadian Department of Transport
		FAA Designee		Repair Station	X	Inspection Authorization		Other *(Specify)*

Certificate or Designation No. 2695973

Signature/Date of Authorized Individual: 10/14/2016

FAA Form 337 (10/06)

NOTICE

Weight and balance or operating limitation changes shall be entered in the appropriate aircraft record. An alteration must be compatible with all previous alterations to assure continued conformity with the applicable airworthiness requirements.

8. Description of Work Accomplished

(If more space is required, attach additional sheets. Identify with aircraft nationality and registration mark and date work completed.)

N98624	10/13/2016
Nationality and Registration Mark	Date

Aircraft s/n 340A-0064 Hobbs 939.0

Aircraft modified by installation of external aft body strakes in accordance with FAA approved Aircraft Performance Modification master drawing list as listed on AML No. SA01935LA, Revision D dated 02/15/2012. Weight and balance revised.

End///

☐ Additional Sheets Are Attached

FAA Form 337 (10/06)

US Department of Transportation
Federal Aviation Administration

MAJOR REPAIR AND ALTERATION
(Airframe, Powerplant, Propeller, or Appliance)

OMB No. 2120-0020
Exp: 8/31/2014

Electronic Tracking Number

For FAA Use Only

INSTRUCTIONS: Print or type all entries. See Title 14 CFR §43.9, Part 43 Appendix B, and AC 43.9-1 (or subsequent revision thereof) for instructions and disposition of this form. This report is required by law (49 U.S.C. §44701). Failure to report can result in a civil penalty for each such violation. (49 U.S.C. §46301(a))

1. Aircraft	Nationality and Registration Mark: N98624	Serial No.: 340A-0064	
	Make: CESSNA	Model: 340A	Series:
2. Owner	Name *(As shown on registration certificate)*: Darrell D Holmstrom	Address *(As shown on registration certificate)*: Address 3020 Brittany Pl; City Anchorage; State AK; Zip 99504; Country USA	

3. For FAA Use Only

4. Type		5. Unit Identification			
Repair	Alteration	Unit	Make	Model	Serial No.
☐	☐	AIRFRAME	—	*(As described in Item 1 above)*	—
☐	☒	POWERPLANT	Continental	TSIO-520-NB	276944-R
☐	☐	PROPELLER			
☐	☐	APPLIANCE	Type / Manufacturer		

6. Conformity Statement

A. Agency's Name and Address	B. Kind of Agency		
Name: Darrell D Holmstrom	x U. S. Certificated Mechanic		Manufacturer
Address: 3020 Brittany Pl	Foreign Certificated Mechanic	C. Certificate No.	
City: Anchorage State: AK	Certificated Repair Station	2695973	
Zip: 99504 Country: USA	Certificated Maintenance Organization		

D. I certify that the repair and/or alteration made to the unit(s) identified in item 5 above and described on the reverse or attachments hereto have been made in accordance with the requirements of Part 43 of the U.S. Federal Aviation Regulations and that the information furnished herein is true and correct to the best of my knowledge.

Extended range fuel per 14 CFR Part 43 App. B ☐

Signature/Date of Authorized Individual: 10/13/2016

7. Approval for Return to Service

Pursuant to the authority given persons specified below, the unit identified in item 5 was inspected in the manner prescribed by the Administrator of the Federal Aviation Administration and is ☒ Approved ☐ Rejected

BY								
		FAA Flt. Standards Inspector		Manufacturer		Maintenance Organization		Persons Approved by Canadian Department of Transport
		FAA Designee		Repair Station	X	Inspection Authorization		Other *(Specify)*

Certificate or Designation No. 2695973

Signature/Date of Authorized Individual: 10/14/2016

FAA Form 337 (10/06)

NOTICE

Weight and balance or operating limitation changes shall be entered in the appropriate aircraft record. An alteration must be compatible with all previous alterations to assure continued conformity with the applicable airworthiness requirements.

8. Description of Work Accomplished

(If more space is required, attach additional sheets. Identify with aircraft nationality and registration mark and date work completed.)

N98624	10/13/2016
Nationality and Registration Mark	Date

Removed six (6) Continental fuel nozzles P/N 632748-14C-NB and installed General Aviation Modifications, Inc. turboGAMIjectors® kit No. GT14C-NB S/N 24710 STC No. SE09289SC PMA No. PQ821SW per turboGAMIjectors® Installation Procedure No. IP-97-002 (Rev 005) dated 5 Oct 2005. No change in weight or balance.

//

//END//

LEFT ENGINE

☐ Additional Sheets Are Attached

US Department of Transportation
Federal Aviation Administration

MAJOR REPAIR AND ALTERATION
(Airframe, Powerplant, Propeller, or Appliance)

OMB No. 2120-0020
Exp: 8/31/2014

Electronic Tracking Number

For FAA Use Only

INSTRUCTIONS: Print or type all entries. See Title 14 CFR §43.9, Part 43 Appendix B, and AC 43.9-1 (or subsequent revision thereof) for instructions and disposition of this form. This report is required by law (49 U.S.C. §44701). Failure to report can result in a civil penalty for each such violation. (49 U.S.C. §46301(a))

1. Aircraft	Nationality and Registration Mark: N98624	Serial No.: 340A-0064	
	Make: CESSNA	Model: 340A	Series:
2. Owner	Name *(As shown on registration certificate)*: Darrell D Holmstrom	Address *(As shown on registration certificate)*: Address 3020 Brittany Pl; City Anchorage; State AK; Zip 99504; Country USA	

3. For FAA Use Only

4. Type		5. Unit Identification			
Repair	Alteration	Unit	Make	Model	Serial No.
☐	☐	AIRFRAME	—	*(As described in Item 1 above)*	—
☐	☒	POWERPLANT	Continental	TSIO-520-NB	276940-R
☐	☐	PROPELLER			
☐	☐	APPLIANCE	Type / Manufacturer		

6. Conformity Statement

A. Agency's Name and Address
Name: Darrell D Holmstrom
Address: 3020 Brittany Pl
City: Anchorage State: AK
Zip: 99504 Country: USA

B. Kind of Agency

x	U. S. Certificated Mechanic		Manufacturer
	Foreign Certificated Mechanic	C. Certificate No.	
	Certificated Repair Station	2695973	
	Certificated Maintenance Organization		

D. I certify that the repair and/or alteration made to the unit(s) identified in item 5 above and described on the reverse or attachments hereto have been made in accordance with the requirements of Part 43 of the U.S. Federal Aviation Regulations and that the information furnished herein is true and correct to the best of my knowledge.

Extended range fuel per 14 CFR Part 43 App. B ☐

Signature/Date of Authorized Individual: 10/13/2016

7. Approval for Return to Service

Pursuant to the authority given persons specified below, the unit identified in item 5 was inspected in the manner prescribed by the Administrator of the Federal Aviation Administration and is ☒ Approved ☐ Rejected

BY								
		FAA Flt. Standards Inspector		Manufacturer		Maintenance Organization		Persons Approved by Canadian Department of Transport
		FAA Designee		Repair Station	X	Inspection Authorization		Other *(Specify)*

Certificate or Designation No.: 2695973

Signature/Date of Authorized Individual: 10/14/2016

FAA Form 337 (10/06)

NOTICE

Weight and balance or operating limitation changes shall be entered in the appropriate aircraft record. An alteration must be compatible with all previous alterations to assure continued conformity with the applicable airworthiness requirements.

8. Description of Work Accomplished

(If more space is required, attach additional sheets. Identify with aircraft nationality and registration mark and date work completed.)

N98624	10/13/2016
Nationality and Registration Mark	Date

Removed six (6) Continental fuel nozzles P/N 632748-14C-NB and installed General Aviation Modifications, Inc. turboGAMIjectors®kit No. GT14C-NB S/N 24711 STC No. SE09289SC PMA No. PQ821SW per turboGAMIjectors® Installation Procedure No. IP-97-002 (Rev 005) dated 5 Oct 2005. No change in weight or balance.

//
//END//

RIGHT ENGINE

☐ Additional Sheets Are Attached

US Department of Transportation
Federal Aviation Administration

MAJOR REPAIR AND ALTERATION
(Airframe, Powerplant, Propeller, or Appliance)

OMB No. 2120-0020
Exp: 6/31/2014

Electronic Tracking Number

For FAA Use Only

INSTRUCTIONS: Print or type all entries. See Title 14 CFR §43.9, Part 43 Appendix B, and AC 43.9-1 (or subsequent revision thereof) for instructions and disposition of this form. This report is required by law (49 U.S.C. §44701). Failure to report can result in a civil penalty for each such violation. (49 U.S.C. §46301(a))

1. Aircraft	Nationality and Registration Mark: N98624	Serial No.: 340A-0064	
	Make: CESSNA	Model: 340A	Series:
2. Owner	Name (As shown on registration certificate): Darrell D Holmstrom	Address (As shown on registration certificate): Address 3020 Brittany Pl; City Anchorage; State AK; Zip 99504; Country USA	

3. For FAA Use Only

4. Type		5. Unit Identification			
Repair	Alteration	Unit	Make	Model	Serial No.
☐	☐	AIRFRAME	—	(As described in Item 1 above)	—
☐	☒	POWERPLANT	Continental	TSIO-520-NB	276944-R
☐	☐	PROPELLER			
☐	☐	APPLIANCE	Type / Manufacturer		

6. Conformity Statement

A. Agency's Name and Address	B. Kind of Agency	
Name: Darrell D Holmstrom	x U. S. Certificated Mechanic	Manufacturer
Address: 3020 Brittany Pl	Foreign Certificated Mechanic	C. Certificate No.
City: Anchorage State: AK	Certificated Repair Station	2695973
Zip: 99504 Country: USA	Certificated Maintenance Organization	

D. I certify that the repair and/or alteration made to the unit(s) identified in item 5 above and described on the reverse or attachments hereto have been made in accordance with the requirements of Part 43 of the U.S. Federal Aviation Regulations and that the information furnished herein is true and correct to the best of my knowledge.

Extended range fuel per 14 CFR Part 43 App. B ☐

Signature/Date of Authorized Individual: 10/13/2016

7. Approval for Return to Service

Pursuant to the authority given persons specified below, the unit identified in item 5 was inspected in the manner prescribed by the Administrator of the Federal Aviation Administration and is ☒ Approved ☐ Rejected

BY								
		FAA Flt. Standards Inspector		Manufacturer		Maintenance Organization		Persons Approved by Canadian Department of Transport
		FAA Designee		Repair Station	X	Inspection Authorization		Other (Specify)

Certificate or Designation No. 2695973

Signature/Date of Authorized Individual: 10/14/2016

FAA Form 337 (10/06)

NOTICE

Weight and balance or operating limitation changes shall be entered in the appropriate aircraft record. An alteration must be compatible with all previous alterations to assure continued conformity with the applicable airworthiness requirements.

8. Description of Work Accomplished

(If more space is required, attach additional sheets. Identify with aircraft nationality and registration mark and date work completed.)

N98624	10/13/2016
Nationality and Registration Mark	Date

Right magneto removed and replaced with electronic ignition system. This engine modified by Electroair Acquisition Corp STC SA03286CH dated 01/15/2015 in accordance with EIS-61000 installation manual revision 9 dated 11/03/2015. Weight and balance revised. End//

☐ Additional Sheets Are Attached

US Department of Transportation Federal Aviation Administration

MAJOR REPAIR AND ALTERATION
(Airframe, Powerplant, Propeller, or Appliance)

OMB No. 2120-0020 Exp: 8/31/2014

Electronic Tracking Number

For FAA Use Only

INSTRUCTIONS: Print or type all entries. See Title 14 CFR §43.9, Part 43 Appendix B, and AC 43.9-1 (or subsequent revision thereof) for instructions and disposition of this form. This report is required by law (49 U.S.C. §44701). Failure to report can result in a civil penalty for each such violation. (49 U.S.C. §46301(a))

1. Aircraft	Nationality and Registration Mark: N98624	Serial No.: 340A-0064
	Make: CESSNA	Model: 340A / Series:
2. Owner	Name *(As shown on registration certificate)*: Darrell D Holmstrom	Address *(As shown on registration certificate)*: Address 3020 Brittany Pl; City Anchorage; State AK; Zip 99504; Country USA

3. For FAA Use Only

4. Type		5. Unit Identification			
Repair	Alteration	Unit	Make	Model	Serial No.
☐	☐	AIRFRAME	—	*(As described in Item 1 above)*	—
☐	☒	POWERPLANT	Continental	TSIO-520-NB	276940-R
☐	☐	PROPELLER			
☐	☐	APPLIANCE	Type / Manufacturer		

6. Conformity Statement

A. Agency's Name and Address

Name: Darrell D Holmstrom
Address: 3020 Brittany Pl
City: Anchorage State: AK
Zip: 99504 Country: USA

B. Kind of Agency

x	U. S. Certificated Mechanic		Manufacturer
	Foreign Certificated Mechanic	C. Certificate No.	
	Certificated Repair Station	2695973	
	Certificated Maintenance Organization		

D. I certify that the repair and/or alteration made to the unit(s) identified in item 5 above and described on the reverse or attachments hereto have been made in accordance with the requirements of Part 43 of the U.S. Federal Aviation Regulations and that the information furnished herein is true and correct to the best of my knowledge.

Extended range fuel per 14 CFR Part 43 App. B ☐

Signature/Date of Authorized Individual: 10/13/2016

7. Approval for Return to Service

Pursuant to the authority given persons specified below, the unit identified in item 5 was inspected in the manner prescribed by the Administrator of the Federal Aviation Administration and is ☒ Approved ☐ Rejected

BY								
		FAA Flt. Standards Inspector		Manufacturer		Maintenance Organization		Persons Approved by Canadian Department of Transport
		FAA Designee		Repair Station	X	Inspection Authorization		Other *(Specify)*

Certificate or Designation No. 2695973

Signature/Date of Authorized Individual: 10/14/2016

FAA Form 337 (10/06)

NOTICE

Weight and balance or operating limitation changes shall be entered in the appropriate aircraft record. An alteration must be compatible with all previous alterations to assure continued conformity with the applicable airworthiness requirements.

8. Description of Work Accomplished
(If more space is required, attach additional sheets. Identify with aircraft nationality and registration mark and date work completed.)

Nationality and Registration Mark	Date
N98624	10/13/2016

Right magneto removed and replaced with electronic ignition system. This engine modified by Electroair Acquisition Corp STC SA03286CH dated 01/15/2015 in accordance with EIS-61000 installation manual revision 9 dated 11/03/2015. Weight and balance revised. End//

☐ Additional Sheets Are Attached

US Department of Transportation
Federal Aviation Administration

MAJOR REPAIR AND ALTERATION
(Airframe, Powerplant, Propeller, or Appliance)

OMB No. 2120-0020
Exp: 8/31/2014

Electronic Tracking Number

For FAA Use Only

INSTRUCTIONS: Print or type all entries. See Title 14 CFR §43.9, Part 43 Appendix B, and AC 43.9-1 (or subsequent revision thereof) for instructions and disposition of this form. This report is required by law (49 U.S.C. §44701). Failure to report can result in a civil penalty for each such violation. (49 U.S.C. §46301(a))

1. Aircraft	Nationality and Registration Mark: N98624	Serial No.: 340A-0064	
	Make: CESSNA	Model: 340A	Series:
2. Owner	Name *(As shown on registration certificate)*: Darrell D Holmstrom	Address *(As shown on registration certificate)*: Address 3020 Brittany Pl; City Anchorage; State AK; Zip 99504; Country USA	

3. For FAA Use Only

4. Type		5. Unit Identification			
Repair	Alteration	Unit	Make	Model	Serial No.
☐	☐	AIRFRAME	—	*(As described in Item 1 above)*	—
☐	☒	POWERPLANT	Continental	TSIO-520-NB	276940-R
☐	☐	PROPELLER			
☐	☐	APPLIANCE	Type / Manufacturer		

6. Conformity Statement

A. Agency's Name and Address	B. Kind of Agency	
Name: Darrell D Holmstrom	x U. S. Certificated Mechanic	☐ Manufacturer
Address: 3020 Brittany Pl	☐ Foreign Certificated Mechanic	C. Certificate No.
City: Anchorage State: AK	☐ Certificated Repair Station	2695973
Zip: 99504 Country: USA	☐ Certificated Maintenance Organization	

D. I certify that the repair and/or alteration made to the unit(s) identified in item 5 above and described on the reverse or attachments hereto have been made in accordance with the requirements of Part 43 of the U.S. Federal Aviation Regulations and that the information furnished herein is true and correct to the best of my knowledge.

Extended range fuel per 14 CFR Part 43 App. B ☐

Signature/Date of Authorized Individual: 10/13/2016

7. Approval for Return to Service

Pursuant to the authority given persons specified below, the unit identified in item 5 was inspected in the manner prescribed by the Administrator of the Federal Aviation Administration and is ☒ Approved ☐ Rejected

BY								
	☐	FAA Flt. Standards Inspector	☐	Manufacturer	☐	Maintenance Organization	☐	Persons Approved by Canadian Department of Transport
	☐	FAA Designee	☐	Repair Station	X	Inspection Authorization		Other *(Specify)*

Certificate or Designation No. 2695973

Signature/Date of Authorized Individual: 10/14/2016

FAA Form 337 (10/06)

NOTICE

Weight and balance or operating limitation changes shall be entered in the appropriate aircraft record. An alteration must be compatible with all previous alterations to assure continued conformity with the applicable airworthiness requirements.

8. Description of Work Accomplished
(If more space is required, attach additional sheets. Identify with aircraft nationality and registration mark and date work completed.)

N98624	10/13/2016
Nationality and Registration Mark	Date

This engine modified by installation of American Aviation Inc intercooler and associated systems in accordance with STC SE4159NM and American Aviation Inc Top Drawing List TDL063 Revision G dated 05/04/1993. Aircraft has been modified per STC SA4158NM. Engine operating limits are specified in the American Aviation Inc FAA approved aircraft flight manual supplement which is required by STC SA4158NM.
End///

☐ Additional Sheets Are Attached

US Department of Transportation
Federal Aviation Administration

MAJOR REPAIR AND ALTERATION
(Airframe, Powerplant, Propeller, or Appliance)

OMB No. 2120-0020
Exp: 8/31/2014

Electronic Tracking Number

For FAA Use Only

INSTRUCTIONS: Print or type all entries. See Title 14 CFR §43.9, Part 43 Appendix B, and AC 43.9-1 (or subsequent revision thereof) for instructions and disposition of this form. This report is required by law (49 U.S.C. §44701). Failure to report can result in a civil penalty for each such violation. (49 U.S.C. §46301(a))

1. Aircraft	Nationality and Registration Mark: N98624	Serial No.: 340A-0064	
	Make: CESSNA	Model: 340A	Series:
2. Owner	Name *(As shown on registration certificate)*: Darrell D Holmstrom	Address *(As shown on registration certificate)*: Address: 3020 Brittany Pl; City: Anchorage; State: AK; Zip: 99504; Country: USA	

3. For FAA Use Only

4. Type		5. Unit Identification			
Repair	Alteration	Unit	Make	Model	Serial No.
☐	☐	AIRFRAME	—	*(As described in Item 1 above)*	—
☐	☒	POWERPLANT	Continental	TSIO-520-NB	276944-R
☐	☐	PROPELLER			
☐	☐	APPLIANCE	Type / Manufacturer		

6. Conformity Statement

A. Agency's Name and Address	B. Kind of Agency	
Name: Darrell D Holmstrom	x U. S. Certificated Mechanic	Manufacturer
Address: 3020 Brittany Pl	Foreign Certificated Mechanic	C. Certificate No.
City: Anchorage State: AK	Certificated Repair Station	2695973
Zip: 99504 Country: USA	Certificated Maintenance Organization	

D. I certify that the repair and/or alteration made to the unit(s) identified in item 5 above and described on the reverse or attachments hereto have been made in accordance with the requirements of Part 43 of the U.S. Federal Aviation Regulations and that the information furnished herein is true and correct to the best of my knowledge.

Extended range fuel per 14 CFR Part 43 App. B ☐

Signature/Date of Authorized Individual: 10/13/2016

7. Approval for Return to Service

Pursuant to the authority given persons specified below, the unit identified in item 5 was inspected in the manner prescribed by the Administrator of the Federal Aviation Administration and is ☒ Approved ☐ Rejected

BY								
		FAA Flt. Standards Inspector		Manufacturer		Maintenance Organization		Persons Approved by Canadian Department of Transport
		FAA Designee		Repair Station	X	Inspection Authorization		Other *(Specify)*

Certificate or Designation No. 2695973

Signature/Date of Authorized Individual: 10/14/2016

FAA Form 337 (10/06)

NOTICE

Weight and balance or operating limitations changes shall be entered in the appropriate aircraft record. An alteration must be compatible with all previous alterations to assure continued conformity with the applicable airworthiness requirements.

8. Description of Work Accomplished
(If more space is required, attach additional sheets. Identify with aircraft nationality and registration mark and date work completed.)

N98624	10/13/2016
Nationality and Registration Mark	Date

This engine modified by installation of American Aviation Inc intercooler and associated systems in accordance with STC SE4159NM and American Aviation Inc Top Drawing List TDL063 Revision G dated 05/04/1993. Aircraft has been modified per STC SA4158NM. Engine operating limits are specified in the American Aviation Inc FAA approved aircraft flight manual supplement which is required by STC SA4158NM.
End//

☐ Additional Sheets Are Attached

US Department of Transportation
Federal Aviation Administration

MAJOR REPAIR AND ALTERATION
(Airframe, Powerplant, Propeller, or Appliance)

Form Approved OMB No. 2120-0020 2/28/2011

Electronic Tracking Number

For FAA Use Only

INSTRUCTIONS: Print or type all entries. See Title 14 CFR §43.9, Part 43 Appendix B, and AC 43.9-1 (or subsequent revision thereof) for instructions and disposition of this form. This report is required by law (49 U.S.C. §44701). Failure to report can result in a civil penalty for each such violation. (49 U.S.C. §46301(a))

1. Aircraft	Nationality and Registration Mark: N98624	Serial No.: 340A-0064	
	Make: Cessna	Model: 340A	Series:
2. Owner	Name *(As shown on registration certificate)*: HOLMSTROM DARRELL D	Address *(As shown on registration certificate)*: Address 3020 BRITTANY PL; City Anchorage; State AK; Zip 99504-3986; Country USA	

3. For FAA Use Only

4. Type		5. Unit Identification			
Repair	Alteration	Unit	Make	Model	Serial No.
☐	☑	AIRFRAME	—	*(As described in Item 1 above)*	—
☐	☐	POWERPLANT			
☐	☐	PROPELLER			
☐	☐	APPLIANCE	Type / Manufacturer		

6. Conformity Statement

A. Agency's Name and Address	B. Kind of Agency	
Name: Avionics Specialists of Alaska	☐ U. S. Certificated Mechanic	☐ Manufacturer
Address: 3625 Aircraft Dr	☐ Foreign Certificated Mechanic	C. Certificate No.
City: Anchorage State: AK	✓ Certificated Repair Station	
Zip: 99502 Country: USA	☐ Certificated Maintenance Organization	X95R014X

D. I certify that the repair and/or alteration made to the unit(s) identified in item 5 above and described on the reverse or attachments hereto have been made in accordance with the requirements of Part 43 of the U.S. Federal Aviation Regulations and that the information furnished herein is true and correct to the best of my knowledge.

Extended range fuel per 14 CFR Part 43 App. B ☐

Signature/Date of Authorized Individual: 9-16-16

7. Approval for Return to Service

Pursuant to the authority given persons specified below, the unit identified in item 5 was inspected in the manner prescribed by the Administrator of the Federal Aviation Administration and is ☐ Approved ☐ Rejected

BY								
	☐	FAA Flt. Standards Inspector	☐	Manufacturer	☐	Maintenance Organization	☐	Persons Approved by Canadian Department of Transport
	☐	FAA Designee	✓	Repair Station	☐	Inspection Authorization		Other *(Specify)*

Certificate or Designation No.: X95R014X

Signature/Date of Authorized Individual: 9-16-16

NOTICE

Weight and balance or operating limitation changes shall be entered in the appropriate aircraft record. An alteration must be compatible with all previous alterations to assure continued conformity with the applicable airworthiness requirements.

8. Description of Work Accomplished
(If more space is required, attach additional sheets. Identify with aircraft nationality and registration mark and date work completed.)

N98624	9-16-16
Nationality and Registration Mark	Date

Installed Garmin GDL88 as per STC #SA02119SE, Installation of Garmin GDL88 ADS-B UAT Transceiver System in accordance with FAA approved Master Drawing List, 005-00645-02, Rev. 1, dated 12/28/2012, or later FAA approved revision.

An FAA-approved Airplane Flight Manual Supplement for the Garmin GDL 84/88 ADS-B Transceiver, Document No. 190-01310-02, Rev. 3, dated 10/22/2015, has been provided to the operator.

Instructions for Continued Airworthiness (ICA) for the GDL 84/88, Document No. 190-01310-01, Rev. 3, dated 10/22/2015, has been provided to the operator.

----------END----------

☐ Additional Sheets Are Attached

US Department of Transportation
Federal Aviation Administration

MAJOR REPAIR AND ALTERATION
(Airframe, Powerplant, Propeller, or Appliance)

Form Approved OMB No. 2120-0020 2/28/2011

Electronic Tracking Number

For FAA Use Only

INSTRUCTIONS: Print or type all entries. See Title 14 CFR §43.9, Part 43 Appendix B, and AC 43.9-1 (or subsequent revision thereof) for instructions and disposition of this form. This report is required by law (49 U.S.C. §44701). Failure to report can result in a civil penalty for each such violation. (49 U.S.C. §46301(a))

1. Aircraft	Nationality and Registration Mark N98624	Serial No. 340A-0064	
	Make Cessna	Model 340A	Series
2. Owner	Name *(As shown on registration certificate)* HOLMSTROM DARRELL D	Address *(As shown on registration certificate)* Address 3020 BRITTANY PI City Anchorage State AK Zip 99504-3986 Country USA	

3. For FAA Use Only

4. Type		5. Unit Identification			
Repair	Alteration	Unit	Make	Model	Serial No.
☐	☑	AIRFRAME	—	*(As described in Item 1 above)*	—
☐	☐	POWERPLANT			
☐	☐	PROPELLER			
☐	☐	APPLIANCE	Type Manufacturer		

6. Conformity Statement

A. Agency's Name and Address	B. Kind of Agency	
Name Avionics Specialists of Alaska	☐ U. S. Certificated Mechanic	☐ Manufacturer
Address 3625 Aircraft Dr	☐ Foreign Certificated Mechanic	C. Certificate No.
City Anchorage State AK	✓ Certificated Repair Station	
Zip 99502 Country USA	☐ Certificated Maintenance Organization	X95R014X

D. I certify that the repair and/or alteration made to the unit(s) identified in item 5 above and described on the reverse or attachments hereto have been made in accordance with the requirements of Part 43 of the U.S. Federal Aviation Regulations and that the information furnished herein is true and correct to the best of my knowledge.

Extended range fuel per 14 CFR Part 43 App. B ☐	Signature/Date of Authorized Individual 9-16-16

7. Approval for Return to Service

Pursuant to the authority given persons specified below, the unit identified in item 5 was inspected in the manner prescribed by the Administrator of the Federal Aviation Administration and is ☒ Approved ☐ Rejected

BY								
	☐	FAA Flt. Standards Inspector	☐	Manufacturer	☐	Maintenance Organization	☐	Persons Approved by Canadian Department of Transport
	☐	FAA Designee	✓	Repair Station	☐	Inspection Authorization		Other *(Specify)*

Certificate or Designation No. X95R014X	Signature/Date of Authorized Individual 9-16-16

FAA Form 337 (10-06)

NOTICE

Weight and balance or operating limitation changes shall be entered in the appropriate aircraft record. An alteration must be compatible with all previous alterations to assure continued conformity with the applicable airworthiness requirements.

8. Description of Work Accomplished
(If more space is required, attach additional sheets. Identify with aircraft nationality and registration mark and date work completed.)

N98624	9-16-16
Nationality and Registration Mark	Date

Removed old engine gauges and installed new Electronics International CGR-30P as per STC#SA02283SE. Installation of Electronics International Inc. Glass Panel Engine Monitor (with In Flight Data) CGR-30P in accordance with the Installation Instructions, Document No. II 02151301, Revision B, dated June 21, 2013, or later FAA-approved revision. This modification must be inspected and maintained in accordance with Electronics International, Inc. Instructions for Continued Airworthiness, Document No. 06211301, Revision B, or later FAA-accepted revision. Weight and balance to be updated by customer. Equipment list updated by customer.

----------END----------

☐ Additional Sheets Are Attached

UNITED STATES OF AMERICA
DEPARTMENT OF TRANSPORTATION – FEDERAL AVIATION ADMINISTRATION

Application for Export Certificate of Airworthiness

Form approved.
Budget Bureau No. 04-R0059

EXPORT CERTIFICATE NO.
E-151062

INSTRUCTIONS.—This application is to be submitted to an authorized FAA representative (one copy) when the product(s) to be exported is (are) presented for inspection. Use Part I for Class I products and Part II for Class II. For complete aircraft execute items 1 through 11 as applicable. For engines and propellers, omit items 5A and 6. Part III is for FAA use only.

PART I

1. APPLICATION IS MADE FOR AN EXPORT CERTIFICATE OF AIRWORTHINESS TO COVER THE PRODUCT(S) DESCRIBED BELOW, WHICH IS (ARE): ☒ NEW ☐ USED (*Aircraft*) ☐ NEWLY OVERHAULED

2. NAME AND ADDRESS OF EXPORTER	3. NAME AND ADDRESS OF FOREIGN PURCHASER	4. COUNTRY OF DESTINATION
Fontana Aviation, Inc. Ford Airport Iron Mountain, Michigan 49801	Manfred Schilling GMBH Hans Boeckler Str #12 D-4220 Dinslaken, W.G.	West Germany

5. DESCRIPTION OF PRODUCT(S)

TYPE	MAKE AND MODEL	IDENTIFICATION NO.	SERIAL NUMBERS	FAA SPEC. NO.	OPERATING TIME (Hours) SINCE OVERHAUL	OPERATING TIME (Hours) TOTAL
a. AIRCRAFT	Cessna 340A	D-IMMS	340A0064	3A25	-	8.8
b. ENGINES	Continental TSIO520-N		L 509185-[illegible]		-	8.8
			R 509211-[illegible]	E8CE	-	8.8
c. PROPELLERS	McCauley Hub 3AF32C93-X		L 761587		-	8.8
			R 761583	P22EA	-	8.8

6. THE AIRCRAFT WAS GIVEN A SATISFACTORY FLIGHT TEST ON 5-18-76 (*Date*)

7. DOES THE PRODUCT COMPLY WITH ALL APPLICABLE FEDERAL AVIATION REGULATIONS, AIRWORTHINESS DIRECTIVES, AND OTHER FAA REQUIREMENTS? ☒ YES ☐ NO (*Explain in "Remarks"*)

8. HAVE APPLICABLE SPECIAL REQUIREMENTS OF THE IMPORTING COUNTRY BEEN COMPLIED WITH? ☐ YES ☐ NO (*Explain in "Remarks"*) NONE

9. HAS PROPER PREVENTATIVE TREATMENT BEEN APPLIED TO PRODUCTS SUSCEPTIBLE TO RAPID CORROSION WHEN BEING SHIPPED? ☒ YES ☐ NO

10. REMARKS

11. EXPORTER'S CERTIFICATION

The undersigned certifies that the above statements are true and that the product(s) described herein is (are) airworthy and in condition for safe operation except as may be noted under item 10 "Remarks," above.

August 11, 1976 (*Date*) (*Signature of Applicant or Authorized Representative*) President (*Title*)

FAA Form 8130-1 (6-69)

PART II

12. APPLICATION IS MADE FOR APPROVAL OF AERONAUTICAL PARTS FOR EXPORT AS INDICATED BELOW:

13. NAME AND ADDRESS OF EXPORTER	14. NAME AND ADDRESS OF FOREIGN PURCHASER	15. COUNTRY OF DESTINATION

16. PARTS ARE ELIGIBLE FOR INSTALLATION ON _____ (Make and Model Class I Product) _____ (FAA Spec. No.)

17. THE PARTS ARE (check one): ☐ NEW ☐ NEWLY OVERHAULED

18. THE PARTS ARE DESCRIBED (check one):

☐ By Name, Part Number, and Quantity on the attached Invoice or Packing Sheet No. _____

☐ Below by Name, Part Number, and Quantity.

19. EXPORTER'S CERTIFICATION

I certify that the foregoing statements are true and that the parts described herein are airworthy and conform to FAA approved design data.

_____ (Date) _____ (Signature of Applicant or Authorized Representative) _____ (Title)

PART III—APPROVAL (FOR FAA USE ONLY)

20. IT IS CONSIDERED THAT THE PRODUCT(S) DESCRIBED IN _____ (Part I or II) IS (ARE) AIRWORTHY AND CONFORM(S) TO PERTINENT REQUIREMENTS EXCEPT AS NOTED IN ITEM 10.

Richard R. Porter (Signature) AGL-GADO-8 (Number) 8-11-76 (Date)

Check One: ☐ DMIR ☐ DELEGATION OPTION MFR. ☒ FAA INSPECTOR

21. _____ (Quantity) APPROVAL TAGS, FORMS FAA 8130-3, WERE ISSUED FOR THE PARTS DESCRIBED IN PART II.

22. EXPORT FILE SPOT-CHECKED BY:

_____ (FAA Supervising Inspector) _____ (D. O. No.) _____ (Date)

The United States of America
Department of Transportation
Federal Aviation Administration

No. E-151062

Washington, D.C.

Export Certificate of Airworthiness

This certifies *that the product identified below and more particularly described in Specification (s)*[1] *of the Federal Aviation Administration, Numbered* 3A25, E8CE, P22EA *has been examined and as of the date of this certificate, is considered airworthy in accordance with a comprehensive and detailed airworthiness code of the United States Government, and is in compliance with those special requirements of the importing country filed with the United States Government, except as noted below. This certificate in no way attests to compliance with any agreements or contracts between the vendor and purchaser, nor does it constitute authority to operate an aircraft.*

Product: AIRPLANE

Manufacturer: CESSNA AIRCRAFT COMPANY

Model: 340A

Serial No.: 340A0064

New ☒ *Newly Overhauled* ☐

Used Aircraft ☐

Country to which exported: GERMANY

Exceptions: NONE

ENGINES INSTALLED:
2 Continental TSIO-520-N
Serial Nos. 509185 and 509211

PROPELLERS INSTALLED:
2 McCauley 3AF32C93 (Hub)
82NC-55 (Blades),
Serial Nos. 761587, 761583

Richard L. Porter

RICHARD L. PORTER
Signature of Authorized Representative

08-11-76
Date

AGL-GADO-8
District Office or Designee Number

[1] *For complete aircraft, list applicable specification or Type Certificate Data Sheet numbers for the aircraft, engine, and propeller. Applicable specifications or Type Certificate Data Sheet, if not attached to this export certificate, will have been forwarded to the appropriate governmental office of the importing country.*

FAA Form 8130-4 (7-68) Formerly Form FAA 26

C FAA AC 72-0768

US Department of Transportation
Federal Aviation Administration

MAJOR REPAIR AND ALTERATION
(Airframe, Powerplant, Propeller, or Appliance)

Form Approved OMB No. 2120-0020 11/30/2007

Electronic Tracking Number

For FAA Use Only

INSTRUCTIONS: Print or type all entries. See Title 14 CFR §43.9, Part 43 Appendix B, and AC 43.9-1 (or subsequent revision thereof) for instructions and disposition of this form. This report is required by law (49 U.S.C. §44701). Failure to report can result in a civil penalty for each such violation. (49 U.S.C. §46301(a))

1. Aircraft	Nationality and Registration Mark: USA N98624	Serial No.: 340A-0064	
	Make: CESSNA	Model: 340A	Series:
2. Owner	Name *(As shown on registration certificate)*: Mile High Aviation LLC	Address *(As shown on registration certificate)*: Address 8620 New Braunfels Ave Ste 422; City San Antonio; State TX; Zip 78216-6362; Country USA	

3. For FAA Use Only

4. Type		5. Unit Identification			
Repair	Alteration	Unit	Make	Model	Serial No.
☐	☒	AIRFRAME	—	*(As described in Item 1 above)*	—
☐	☐	POWERPLANT			
☐	☐	PROPELLER			
☐	☐	APPLIANCE	Type / Manufacturer		

6. Conformity Statement

A. Agency's Name and Address
Name: Kerrville Aviation
Address: 1875 AIRPORT LOOP RD
City: KERRVILLE State: TX
Zip: 78028 Country: USA

B. Kind of Agency

X	U. S. Certificated Mechanic	Manufacturer
	Foreign Certificated Mechanic	C. Certificate No.
	Certificated Repair Station	3364941
	Certificated Maintenance Organization	

D. I certify that the repair and/or alteration made to the unit(s) identified in item 5 above and described on the reverse or attachments hereto have been made in accordance with the requirements of Part 43 of the U.S. Federal Aviation Regulations and that the information furnished herein is true and correct to the best of my knowledge.

Extended range fuel per 14 CFR Part 43 App. B ☐

Signature/Date of Authorized Individual
May 27, 2009 Corey Wehmeyer

7. Approval for Return to Service

Pursuant to the authority given persons specified below, the unit identified in item 5 was inspected in the manner prescribed by the Administrator of the Federal Aviation Administration and is ☒ Approved ☐ Rejected

BY							
		FAA Flt. Standards Inspector		Manufacturer		Maintenance Organization	Persons Approved by Canadian Department of Transport
		FAA Designee		Repair Station	X	Inspection Authorization	Other *(Specify)*

Certificate or Designation No.: 3364941

Signature/Date of Authorized Individual
May 27, 2009 Corey Wehmeyer

NOTICE

Weight and balance or operating limitation changes shall be entered in the appropriate aircraft record. An alteration must be compatible with all previous alterations to assure continued conformity with the applicable airworthiness requirements.

8. Description of Work Accomplished
(If more space is required, attach additional sheets. Identify with aircraft nationality and registration mark and date work completed.)

Nationality and Registration Mark	Date
USA N98624	05/27/2009

Aircraft s/n: 340A-0064 Hobbs: 820.8
Aircraft modified by installation of Shadin Company Fuel Flow Indicating System in accordance with Shadin Company installation instructions, Report No. 4028, dated 12 October 1985. Unit interfaced with existing fuel flow transducers. Installation conforms to STC SA544GL. Aircraft weight and balance and equipment list updated to reflect this modification.

☐ Additional Sheets Are Attached

US Department of Transportation
Federal Aviation Administration

MAJOR REPAIR AND ALTERATION
(Airframe, Powerplant, Propeller, or Appliance)

Form Approved OMB No. 2120-0020 11/30/2007

Electronic Tracking Number

For FAA Use Only

INSTRUCTIONS: Print or type all entries. See Title 14 CFR §43.9, Part 43 Appendix B, and AC 43.9-1 (or subsequent revision thereof) for instructions and disposition of this form. This report is required by law (49 U.S.C. §44701). Failure to report can result in a civil penalty for each such violation. (49 U.S.C. §46301(a))

1. Aircraft	Nationality and Registration Mark: USA N98624	Serial No.: 340A-0064	
	Make: CESSNA	Model: 340A	Series:
2. Owner	Name *(As shown on registration certificate)*: Mile High Aviation LLC	Address *(As shown on registration certificate)*: Address 8620 New Braunfels Ave Ste 422; City San Antonio; State TX; Zip 78216-6362; Country USA	

3. For FAA Use Only

4. Type		5. Unit Identification			
Repair	Alteration	Unit	Make	Model	Serial No.
☐	☒	AIRFRAME	—	*(As described in Item 1 above)*	—
☐	☐	POWERPLANT			
☐	☐	PROPELLER			
☐	☐	APPLIANCE	Type / Manufacturer		

6. Conformity Statement

A. Agency's Name and Address	B. Kind of Agency	
Name: Kerrville Aviation	X U. S. Certificated Mechanic	☐ Manufacturer
Address: 1875 AIRPORT LOOP RD	☐ Foreign Certificated Mechanic	C. Certificate No.
City: KERRVILLE State: TX	☐ Certificated Repair Station	3364941
Zip: 78028 Country:	☐ Certificated Maintenance Organization	

D. I certify that the repair and/or alteration made to the unit(s) identified in item 5 above and described on the reverse or attachments hereto have been made in accordance with the requirements of Part 43 of the U.S. Federal Aviation Regulations and that the information furnished herein is true and correct to the best of my knowledge.

Extended range fuel per 14 CFR Part 43 App. B ☐	Signature/Date of Authorized Individual: May 27, 2009 Corey Wehmeyer

7. Approval for Return to Service

Pursuant to the authority given persons specified below, the unit identified in item 5 was inspected in the manner prescribed by the Administrator of the Federal Aviation Administration and is ☒ Approved ☐ Rejected

BY								
	☐	FAA Flt. Standards Inspector	☐	Manufacturer	☐	Maintenance Organization	☐	Persons Approved by Canadian Department of Transport
	☐	FAA Designee	☐	Repair Station	X	Inspection Authorization		Other *(Specify)*

Certificate or Designation No.: 3364941	Signature/Date of Authorized Individual: May 27, 2009 Corey Wehmeyer

NOTICE

Weight and balance or operating limitation changes shall be entered in the appropriate aircraft record. An alteration must be compatible with all previous alterations to assure continued conformity with the applicable airworthiness requirements.

8. Description of Work Accomplished
(If more space is required, attach additional sheets. Identify with aircraft nationality and registration mark and date work completed.)

USA N98624	05/27/2009
Nationality and Registration Mark	Date

Aircraft s/n: 340A-0064 Hobbs: 820.8
Aircraft modified by installation of a vapor cycle air conditioning system, STC SA16RM, in accordance with Kieth Products, Inc. Installation Manual Report No 34-010-61M dated 09-01-1995. Aircraft weight and balance and equipment list updated to reflect this modification. Instructions for Continued Airworthiness are contained in Kieth Products, LP R134a Vapor Cycle Air Conditioning System Service Manual, Document No. TR-134 Rev. G, dated August 21, 2006.

☐ Additional Sheets Are Attached

UNITED STATES OF AMERICA

DEPARTMENT OF TRANSPORTATION - FEDERAL AVIATION ADMINISTRATION

SPECIAL AIRWORTHINESS CERTIFICATE

A	CATEGORY/DESIGNATION	RESTRICTED	
	PURPOSE	WEATHER CONTROL	
B	MANU-FACTURER	NAME	N/A
		ADDRESS	N/A
C	FLIGHT	~~FROM~~	See attached operating limitations
		~~TO~~	See Item "D" on reverse side of this certificate
D	N- 98624		SERIAL NO. 340A0064
	BUILDER CEssna		MODEL 340A
E	DATE OF ISSUANCE 03/13/2001		EXPIRY UNLIMITED
	OPERATING LIMITATIONS DATED 03/13/2001		ARE A PART OF THIS CERTIFICATE
	SIGNATURE OF FAA REPRESENTATIVE EDWARD J. TRAYHAN		DESIGNATION OR OFFICE NO. SW-17

Any alteration, reproduction or misuse of this certificate may be punishable by a fine not exceeding $1,000 or imprisonment not exceeding 3 years, or both. THIS CERTIFICATE MUST BE DISPLAYED IN THE AIRCRAFT IN ACCORDANCE WITH APPLICABLE FEDERAL AVIATION REGULATIONS.

FAA FORM 8130-7 (10/82)

SEE REVERSE SIDE

A	This airworthiness certificate is issued under the authority of the Federal Aviation Act of 1958 and the Federal Aviation Regulations (FAR).
B	This airworthiness certificate authorizes the manufacturer named on the reverse side to conduct production flight tests, and only production flight tests, of aircraft registered in his name. No person may conduct production flight tests under this certificate: (1) Carrying persons or property for compensation or hire; and/or (2) Carrying persons not essential to the purpose of the flight.
C	This airworthiness certificate authorizes the flight specified on the reverse side for the purpose shown in Block A.
D	This airworthiness certificate certifies that, as of the date of issuance, the aircraft to which issued has been inspected and found to meet the requirements of the applicable FAR. The aircraft does not meet the requirements of the applicable comprehensive and detailed airworthiness code as provided by Annex 8 to the Convention On International Civil Aviation. No person may operate the aircraft described on the reverse side: (1) except in accordance with the applicable FAR and in accordance with conditions and limitations which may be prescribed by the Administrator as part of this certificate; (2) over any foreign country without the special permission of that country.
E	Unless sooner surrendered, suspended, or revoked, this airworthiness certificate is effective for the duration and under the conditions prescribed in FAR Part 21, Section 21.181 or 21.217.

OKC

Precision Aircraft Services

PO Box 60273
San Angelo, Tx 76906
915 949 0643
915 9495241 fax
pas@wcc.net

November 4, 2003

FAA GADO
10100 Reunion Place Suite 200
San Antonio, Tx 78216

ATT: Ed Trayhan

Enclosed is the special airworthiness certificate from West Texas Weather Modifier's Cessna 340A, N98624, SN 340A0064, for the purpose of weather control. We would like to surrender this certificate, as we are returning this aircraft to normal category with no plans to use it for weather control anymore.

Thank You,

Frank E Hinds
Agent

RECEIVED
NOV 10 2003

U.S Department
of Transportation
Federal Aviation
Administration

FLIGHT STANDARDS DISTRICT OFFICE
10100 Reunion Place, Suite 200
San Antonio, Texas 78216-4118
(210) 308-3300 (FAX) 308-3399

RESTRICTED CATEGORY OPERATING LIMITATIONS

N98624 Cessna 340A S/N 340A0064

1. In addition to all other applicable FAR's, this aircraft must be operated in accordance with FAR 91.313 and these operating limitations when configured in the restricted category.

2. A copy of these operating limitations must be carried in the aircraft at all times when operating in the restricted configuration.

3. No person may operate this aircraft unless the appropriate airworthiness certificate is displayed at the cabin or cockpit entrance so that it is visible to passengers or crew.

4. Each conversion from one category to another must be accomplished in accordance with the instructions contained on FAA Form 337, dated February 27, 2001.

5. Current Weight and Balance, and Center of Gravity Data will be determined for each configuration prior to operation in that configuration.

6. When configured in the Restricted category, the word " RESTRICTED " must be displayed near each entrance to the cabin or cockpit in letters not less than 2 inches in height nor more than 6 inches in height.

7. Following a configuration change, a maintenance record entry, signed by the person making the conversation, must be made stating the category of the aircraft and must include a statement that the aircraft is " IN A CONDITION FOR SAFE OPERATION ". This entry must be made by an appropriately rated certificated maintenance technician or an appropriately rated authorized Repair Station.

8. No person may be carried in this aircraft during Restricted category operations unless that person is required for the purpose of the flight.

Edward J. Trayhan
Aviation Safety Inspector

March 13, 2001

U.S. Department of Transportation
Federal Aviation Administration

MAJOR REPAIR AND ALTERATION
(Airframe, Powerplant, Propeller, or Appliance)

Form Approved
OMB No.2120-0020

For FAA Use Only

Office Identification
SW-17

INSTRUCTIONS: Print or type all entries. See FAR 43.9, FAR 43 Appendix B, and AC 43.9-1 (or subsequent revision thereof) for instructions and disposition of this form. This report is required by law (49 U.S.C. 1421). Failure to report can result in a civil penalty not to exceed $1,000 for each such violation (Section 901 Federal Aviation Act of 1958).

1. Aircraft	Make Cessna	Model 340A
	Serial No. 340A0064	Nationality and Registration Mark N98624
2. Owner	Name (As shown on registration certificate) West Texas Weather Modification Association	Address (As shown on registration certificate) 8696 Hangar Rd San Angelo, Texas 76904

3. For FAA Use Only

4. Unit Identification / **5. Type**

Unit	Make	Model	Serial No.	Repair	Alteration
AIRFRAME	*(As described in item 1 above)*				X
POWERPLANT					
PROPELLER					
APPLIANCE	Type Manufacturer				

6. Conformity Statement

A. Agency's Name and Address	B. Kind of Agency	C. Certificate No.
Frank E Hinds Precision Aircraft Services PO Box 60273 San Angelo, Texas 76906	X U.S. Certificated Mechanic Foreign Certificated Mechanic Certificated Repair Station Manufacturer	A&P2042285

D. I certify that the repair and/or alteration made to the unit(s) identified in item 4 above and described on the reverse or attachments hereto have been made in accordance with the requirements of Part 43 of the U.S. Federal Aviation Regulations and that the information furnished herein is true and correct to the best of my knowledge.

Date	Signature of Authorized Individual
11-3-2003	

7. Approval for Return To Service

Pursuant to the authority given persons specified below, the unit identified in item 4 was inspected in the manner prescribed by the Administrator of the Federal Aviation Administration and is ☑ APPROVED ☐ REJECTED

BY		FAA Flt. Standards Inspector		Manufacturer	X	Inspection Authorization	Other *(Specify)*
		FAA Designee		Repair Station		Person Appoved by Transport Canada Airworthiness Group	

Date of Approval or Rejection	Certificate or Designation No.	Signature of Authorized Individual
11-3-2003	AP456927714 IA	Gordon Bennett

FAA Form 337 (12-88)

NOTICE

Weight and balance or operating limitation changes shall be entered in the appropriate aircraft record. An alteration must be compatible with all previous alterations to assure continued conformity with the applicable airworthiness requirements.

8. Description of Work Accomplished

(If more space is required, attach additional sheets. Identify with aircraft nationality and registration mark and date work completed.)

N98624

Removed special weather modification equipment and returned aircraft to normal category. Aircraft skin repaired where equipment removed by patching per Cessna model 340 and 340A (D930-28-13) maintenance manual, chapter 16 structual repairs, which allows repairs, page 16-4, fuselage paragraph a and per AC 43-13-1B, chapter 4, sectio 4, par. 4-50 thru 4-58. 2 each 6x8 patches on station FS 210 at centerline bottom of fuselage. 2" oval patch on top right of center line at FS 252.

See weight and balance change this date.

********** NOTHING FOLLOWS **********

☐ Additional Sheets Are Attatched

*U.S.GPO:1994-568-012/00019

O.M.B. No. 2120-0018

U.S. Department of Transportation
Federal Aviation Administration

APPLICATION FOR AIRWORTHINESS CERTIFICATE

INSTRUCTIONS - Print or type. Do not write in shaded areas; these are for FAA use only. Submit original only to an authorized FAA Representative. If additional space is required, use attachment. For special flight permits complete Sections II, VI, and VII as applicable.

I. AIRCRAFT DESCRIPTION

1. REGISTRATION MARK: N-98624	2. AIRCRAFT BUILDER'S NAME (Make): Cessna	3. AIRCRAFT MODEL DESIGNATION: 340A	4. YR. MFR.: 1976	FAA CODING: 2076405
5. AIRCRAFT SERIAL NO.: 340A0064	6. ENGINE BUILDER'S NAME (Make): Continental	7. ENGINE MODEL DESIGNATION: TSIO520-NB		17040
8. NUMBER OF ENGINES: 2	9. PROPELLER BUILDER'S NAME (Make): McCauley	10. PROPELLER MODEL DESIGNATION: 3AF32C505/82NEA-6.5	11. AIRCRAFT IS (Check if applicable): IMPORT	

II. CERTIFICATION REQUESTED

APPLICATION IS HEREBY MADE FOR: (Check applicable items)

A	X	STANDARD AIRWORTHINESS CERTIFICATE (Indicate category)	X	NORMAL		UTILITY		ACROBATIC		TRANSPORT		COMMUTER		BALLOON		OTHER		
B	X	SPECIAL AIRWORTHINESS CERTIFICATE (Check appropriate items)																
		PRIMARY																
		LIMITED																
		PROVISIONAL (Indicate class)		CLASS I														
				CLASS II														
	X	RESTRICTED (Indicate operation(s) to be conducted)		AGRICULTURE AND PEST CONTROL				AERIAL SURVEYING				AERIAL ADVERTISING						
				FOREST (Wildlife conservation)				PATROLLING			X	WEATHER CONTROL						
				OTHER (Specify)														
		EXPERIMENTAL (Indicate operation(s) to be conducted)		RESEARCH AND DEVELOPMENT				AMATEUR BUILT				EXHIBITION						
				AIR RACING				CREW TRAINING				MARKET SURVEY						
				TO SHOW COMPLIANCE WITH THE REGULATIONS				OPERATING (Primary Category) KIT BUILT AIRCRAFT										
		SPECIAL FLIGHT PERMIT (Indicate operation to be conducted, then complete Section VI or VII as applicable on reverse side)		FERRY FLIGHT FOR REPAIRS, ALTERATIONS, MAINTENANCE, OR STORAGE														
				EVACUATE FROM AREA OF IMPENDING DANGER														
				OPERATION IN EXCESS OF MAXIMUM CERTIFICATED TAKE-OFF WEIGHT														
				DELIVERING OR EXPORTING				PRODUCTION FLIGHT TESTING										
				CUSTOMER DEMONSTRATION FLIGHTS														
C		X	MULTIPLE AIRWORTHINESS CERTIFICATE (Check ABOVE "Restricted Operation" and "Standard" or "Limited" as applicable.)															

III. OWNER'S CERTIFICATION

A. REGISTERED OWNER (As shown on certificate of aircraft registration) — IF DEALER, CHECK HERE →

NAME	ADDRESS
West Texas Weather Modification Assoc	8696 Hanger Road, San Angelo, Tx. 76904

B. AIRCRAFT CERTIFICATION BASIS (Check applicable blocks and complete items as indicated)

X	AIRCRAFT SPECIFICATION OR TYPE CERTIFICATE DATA SHEET (Give No. and Revision No.): 3A25 Rev25	X	AIRWORTHINESS DIRECTIVES (Check if all applicable AD's complied with and give latest Biweekly Supplement): 2001-03
	AIRCRAFT LISTING (Give page number(s))	X	SUPPLEMENTAL TYPE CERTIFICATE (List number of each STC incorporated): SA197GL, SA664GL, SA5137NM, SA107GL

C. AIRCRAFT OPERATION AND MAINTENANCE RECORDS

X	CHECK IF RECORDS IN COMPLIANCE WITH 14 CFR section 91.417	TOTAL AIRFRAME HOURS: 5181.2	3 EXPERIMENTAL ONLY (Enter hours flown since last certificate issued or renewed)

D. CERTIFICATION - I hereby certify that I am the registered owner (or his agent) of the aircraft described above, that the aircraft is registered with the Federal Aviation Administration in accordance with Title 49 of the United States Code 44101 et seq. and applicable Federal Aviation Regulations, and that the aircraft has been inspected and is airworthy and eligible for the airworthiness certificate requested.

DATE OF APPLICATION	NAME AND TITLE (Print or type)	SIGNATURE
27 Feburary 2001	Robert R. Reece, Agent	Robert R. Reece

IV. INSPECTION AGENCY VERIFICATION

A. THE AIRCRAFT DESCRIBED ABOVE HAS BEEN INSPECTED AND FOUND AIRWORTHY BY: (Complete this section only if 14 CFR part 21.183(d) applies).

14 CFR part 121 CERTIFICATE HOLDER (Give Certificate No.)	CERTIFICATED MECHANIC (Give Certificate No.)	CERTIFICATED REPAIR STATION (Give Certificate No.)
AIRCRAFT MANUFACTURER (Give name or firm)		

DATE	TITLE	SIGNATURE

V. FAA REPRESENTATIVE CERTIFICATION

(Check ALL applicable blocks in items A and B)

A. I find that the aircraft described in Section I or VII meets requirements for: [X] THE CERTIFICATE REQUESTED; [ ] AMENDMENT OR MODIFICATION OF CURRENT AIRWORTHINESS CERTIFICATE

B. Inspection for a special flight permit under Section VII was conducted by: [ ] FAA INSPECTOR; [ ] FAA DESIGNEE; [ ] CERTIFICATE HOLDER UNDER 14 CFR part 65 / 14 CFR part 121 OR 135 / 14 CFR part 145

DATE	DISTRICT OFFICE	DESIGNEE'S SIGNATURE AND NO.	FAA INSPECTOR'S SIGNATURE
3-13-2001	SWS-17		Edward I. Traylor

VI. PRODUCTION FLIGHT TESTING

A. MANUFACTURER

NAME	ADDRESS

B. PRODUCTION BASIS *(Check applicable item)*

- [ ] PRODUCTION CERTIFICATE *(Give production certificate number)*
- [ ] TYPE CERTIFICATE ONLY
- [ ] APPROVED PRODUCTION INSPECTION SYSTEM

C. GIVE QUANTITY OF CERTIFICATES REQUIRED FOR OPERATING NEEDS →

DATE OF APPLICATION	NAME AND TITLE *(Print or type)*	SIGNATURE

VII. SPECIAL FLIGHT PERMIT PURPOSES OTHER THAN PRODUCTION FLIGHT TEST

A. DESCRIPTION OF AIRCRAFT

REGISTERED OWNER	ADDRESS
BUILDER (Make)	MODEL
SERIAL NUMBER	REGISTRATION MARK

B. DESCRIPTION OF FLIGHT — CUSTOMER DEMONSTRATION FLIGHTS [ ] *(Check if applicable)*

FROM	TO	
VIA	DEPARTURE DATE	DURATION

C. CREW REQUIRED TO OPERATE THE AIRCRAFT AND ITS EQUIPMENT

- [ ] PILOT
- [ ] CO-PILOT
- [ ] FLIGHT ENGINEER
- [ ] OTHER *(Specify)*

D. THE AIRCRAFT DOES NOT MEET THE APPLICABLE AIRWORTHINESS REQUIREMENTS AS FOLLOWS:

E. THE FOLLOWING RESTRICTIONS ARE CONSIDERED NECESSARY FOR SAFE OPERATION: *(Use attachment if necessary)*

F. CERTIFICATION - I hereby certify that I am the registered owner (or his agent) of the aircraft described above; that the aircraft is registered with the Federal Aviation Administration in accordance with Title 49 of the United States Code 44101 et seq. and applicable Federal Aviation Regulations; and that the aircraft has been inspected and is airworthy for the flight described.

DATE	NAME AND TITLE *(Print or type)*	SIGNATURE

VIII. AIRWORTHINESS DOCUMENTATION (FAA/DESIGNEE use only)

- [ ] A. Operating Limitations and Markings in Compliance with 14 CFR section 91.9, as Applicable
- [X] B. Current Operating Limitations Attached
- [X] C. Data, Drawings, Photographs, etc. *(Attach when required)*
- [X] D. Current Weight and Balance Information Available in Aircraft
- [X] E. Major Repair and Alteration, FAA Form 337 *(Attach when required)*
- [X] F. This inspection Recorded in Aircraft Records
- [ ] G. Statement of Conformity, FAA Form 8130-9 *(Attach when required)*
- [ ] H. Foreign Airworthiness Certification for Import Aircraft *(Attach when required)*
- [ ] I. Previous Airworthiness Certificate Issued in Accordance with 14 CFR Section _____ CAR _____ *(Original Attached)*
- [X] J. Current Airworthiness Certificate Issued in Accordance with 14 CFR Section 21.185 / 21.187 *(Copy attached)*

UNITED STATES OF AMERICA

DEPARTMENT OF TRANSPORTATION - FEDERAL AVIATION ADMINISTRATION

SPECIAL AIRWORTHINESS CERTIFICATE

A	CATEGORY/DESIGNATION	RESTRICTED	
	PURPOSE	WEATHER CONTROL	
B	MANU-FACTURER	NAME	N/A
		ADDRESS	N/A
C	FLIGHT	FROM	See attached operating limitations
		TO	See Item "D" on reverse side of this certificate
D	N- 98624		SERIAL NO. 340A0064
	BUILDER Cessna		MODEL 340A
E	DATE OF ISSUANCE 03/13/2001		EXPIRY UNLIMITED
	OPERATING LIMITATIONS DATED 03/13/2001		ARE A PART OF THIS CERTIFICATE
	SIGNATURE OF FAA REPRESENTATIVE EDWARD J. TRAYHAN		DESIGNATION OR OFFICE NO. SW-17

Any alteration, reproduction or misuse of this certificate may be punishable by a fine not exceeding $1,000 or imprisonment not exceeding 3 years, or both THIS CERTIFICATE MUST BE DISPLAYED IN THE AIRCRAFT IN ACCORDANCE WITH APPLICABLE FEDERAL AVIATION REGULATIONS

FAA FORM 8130-7 (10/82)

SEE REVERSE SIDE

A	This airworthiness certificate is issued under the authority of the Federal Aviation Act of 1958 and the Federal Aviation Regulations (FAR).
B	This airworthiness certificate authorizes the manufacturer named on the reverse side to conduct production flight tests, and only production flight tests, of aircraft registered in his name. No person may conduct production flight tests under this certificate: (1) Carrying persons or property for compensation or hire; and/or (2) Carrying persons not essential to the purpose of the flight.
C	This airworthiness certificate authorizes the flight specified on the reverse side for the purpose shown in Block A.
D	This airworthiness certificate certifies that, as of the date of issuance, the aircraft to which issued has been inspected and found to meet the requirements of the applicable FAR. The aircraft does not meet the requirements of the applicable comprehensive and detailed airworthiness code as provided by Annex 8 to the Convention On International Civil Aviation. No person may operate the aircraft described on the reverse side: (1) except in accordance with the applicable FAR and in accordance with conditions and limitations which may be prescribed by the Administrator as part of this certificate; (2) over any foreign country without the special permission of that country.
E	Unless sooner surrendered, suspended, or revoked, this airworthiness certificate is effective for the duration and under the conditions prescribed in FAR Part 21, Section 21.181 or 21.217.

U.S Department
of Transportation
**Federal Aviation
Administration**

FLIGHT STANDARDS DISTRICT OFFICE
10100 Reunion Place, Suite 200
San Antonio, Texas 78216-4118
(210) 308-3300 (FAX) 308-3399

RESTRICTED CATEGORY OPERATING LIMITATIONS

N98624 Cessna 340A S/N 340A0064

1. In addition to all other applicable FAR's, this aircraft must be operated in accordance with FAR 91.313 and these operating limitations when configured in the restricted category.

2. A copy of these operating limitations must be carried in the aircraft at all times when operating in the restricted configuration.

3. No person may operate this aircraft unless the appropriate airworthiness certificate is displayed at the cabin or cockpit entrance so that it is visible to passengers or crew.

4. Each conversion from one category to another must be accomplished in accordance with the instructions contained on FAA Form 337, dated February 27, 2001.

5. Current Weight and Balance, and Center of Gravity Data will be determined for each configuration prior to operation in that configuration.

6. When configured in the Restricted category, the word " RESTRICTED " must be displayed near each entrance to the cabin or cockpit in letters not less than 2 inches in height nor more than 6 inches in height.

7. Following a configuration change, a maintenance record entry, signed by the person making the conversation, must be made stating the category of the aircraft and must include a statement that the aircraft is " IN A CONDITION FOR SAFE OPERATION ". This entry must be made by an appropriately rated certificated maintenance technician or an appropriately rated authorized Repair Station.

8. No person may be carried in this aircraft during Restricted category operations unless that person is required for the purpose of the flight.

Edward J. Trayhan
Aviation Safety Inspector

March 13, 2001

27 February, 2001

To Whom It May Concern:

This is to advise that Robert R. Reece has the authority to proceed with any documents that concern the application for airworthiness for the aircraft that are being modified to install weather modification equipment. He also has the authority to file other documents as necessary to insure the completion of these aircraft. Mr. Reece in this capacity will be acting as our agent.

Sincerely,

Dale Bates

Dale Bates
Texas Weather Modification Association

Cc: All Weather Groups

Debra V. Garcia 3/1/01

DEBRA V. GARCIA
NOTARY PUBLIC
STATE OF TEXAS
My Commission Expires 05-25-2004

US Department of Transportation
Federal Aviation Administration

MAJOR REPAIR AND ALTERATION
(Airframe, Powerplant, Propeller, or Appliance)

Form Approved
OMB No. 2120-0020

For FAA Use Only

Office Identification
SW77 EIT

INSTRUCTIONS: Print or type all entries. See FAR 43.9, FAR 43 Appendix B, and AC 43.9-1 (or subsequent revision thereof) for instructions and disposition of this form. This report is required by law (49 U.S.C. 1421). Failure to report can result in civil penalty not to exceed $1,000 for each such violation (Section 901 Federal Aviation Act of 1958).

1. Aircraft	Make Cessna	Model 340A
	Serial No. 340A0064	Nationality and Registration Mark N-98624
2. Owner	Name *(As shown on registration certificate)* West Texas Weather Modification Assoc	Address *(As shown on registration certificate)* 8696 Hanger Road San Angelo, Tx. 76904

3. For FAA Use Only

4. Unit Identification				**5. Type**	
Unit	Make	Model	Serial No.	Repair	Alteration
AIRFRAME	*(As described in Item 1 above)*				X
POWERPLANT					
PROPELLER					
APPLIANCE	Type Manufacturer				

6. Conformity Statement

A. Agency's Name and Address	B. Kind of Agency		C. Certificate No.
Robert R. Reece 1878 Reece Road San Angelo, Tx. 76904	X	U.S. Certificated Mechanic	A/P 408585892
		Foreign Certificated Mechanic	
		Certificated Repair Station	
		Manufacturer	

D. I certify that the repair and/or alteration made to the unit(s) identified in item 4 above and described on the reverse or attachments hereto have been made in accordance with the requirements of Part 43 of the U.S. Federal Aviation Regulations and that the information furnished herein is true and correct to the best of my knowledge.

Date	Signature of Authorized Individual
27 Feb 2001	Robert R Reece

7. Approval for Return To Service

Pursuant to the authority given persons specified below, the unit identified in item 4 was inspected in the manner prescribed by the Administrator of the Federal Aviation Administration and is ☒ APPROVED ☐ REJECTED

BY							
		FAA Flt. Standards Inspector		Manufacturer	X	Inspection Authorization	Other *(Specify)*
		FAA Designee		Repair Station		Person Approved by Transport Canada Airworthiness Group	

Date of Approval or Rejection	Certificate or Designation No.	Signature of Authorized Individual
27 Feb 2001	I/A 408585892	Robert R Reece

FAA Form 337 (12-88)

NOTICE

Weight and balance or operating limitation changes shall be entered in the appropriate aircraft record. An alteration must be compatible with all previous alterations to assure continued conformity with the applicable airworthiness requirements.

8. Description of Work Accomplished
(If more space is required, attach additional sheets. Identify with aircraft nationality and registration mark and date work completed.)

The work accomplished to install Weather Modification Equipment on Cessna 340A, S/N 340A0064, registration N-98624 was completed in accordance with the following:

1. Engineering Authorization 02-01001 dated February 25, 2001
2. Form 8110-3 dated February 25, 2001

Equipment installed is as follows:
1. Two belly flare racks- bottom of fuselage
2. Two wing flare racks- one each wing
3. Flare racks control panel- under instrument panel
4. Telementry radio- in baggage area
5. Telementry antenna- bottom of fuselage except location is at station 294
6. Restricted sign - cabin entrance window

All work was done per the above 8110-3. Installation of all or any part of the equipment will require the aircraft to be entered into the RESTRICTED category (with the exception of the wiring and antennas which will remain with the aircraft).

Conversion to the standard category from the restricted category will require removal of equipment in accordance with the following: 1. Two belly flare racks- remove the twelve AN3 bolts, nuts,and washers,unplug the cannon plugs and lower the racks. reinstall the twelve bolts, washers, and nuts just removed. Place dust caps on the aircraft cannon plugs. 2. Two wing racks- remove the cannon plugs and place dust caps on the aircraft plugs, remove the six AN3-13A bolts,nuts, and washers from the mounting bars, replace the removed bolts with AN3-6A bolts, nuts,and washers.3. Disconnect the connectors behind the control panel, remove the two screws mounting the panel to the instrument panel, stow the wiring remaining according to AC 43-13-2A. 4. Remove the restricted sign from the cabin entrance window. 5. Remove the restricted airworthiness certificate and display the standard certificate. This work may be accomplished by a certified mechanic or repair station personnel. A new computed weight and balance must be entered into the aircraft log books with a statment that the aircraft is now in the standard category and is in a safe condition for operation.

Conversion back to the restricted category is accomplished by reversing to above procedure and may be done by a certified mechanic or repair station personnel. Compute a new weight and balance and enter into the aircraft log books with a statment that the aircraft is now in the restricted category and in a safe condition for operation.

All hardware is aircraft material and the wiring is installed from the control panel to the equipment as follows: under the flooring to and back to the exits for the equipment. Wiring is routed clear of all system operating controls, heat ducts and is secured using AC 43-13-1B and 2A. All equipment is protected via a 15 amp circuit breaker mounted on the aircraft breaker panel and labled WX EQPT. All control panel operations are labled as to function. A GPS antenna was installed on top of the fuselage at station 254, and a UHF antenna was installed on the fuselage bottom at station 294 using AC43.13-2A,Ch.3,Sect.39 fig. 3.6/3.8 also Sect.38 fig.3.6/3.8 as a reference. Wiring and switches, and circuit breaker was installed using AC43.13-1B Sect.3 Para.11-31,32, Sect. Para.11-49,50, Sect 5,6,7,8 as reference.

In the restricted category the electrical load does not exceed 80% of the alternator capacity.

Weight and balance was revised and entered into the log books
Restricted category operating limitations placed in the aircraft flight manual
Equipment functions as intended per FAR 23.1301 and does not interfere with the airworthiness or functions of any other equipment per FAR 23-1309

This aircraft requires a test flight to insure that none of the installed equipment interferes with the operation of the aircraft. A log book entry must be made recordint this flight.

Instruction for Continued Airworthiness are attached dated February 27, 2001

☒ Additional Sheets Are Attached

Reece Aircraft Service Co.
1878 Reece Road
San Angelo, Tx. 76904
27 February 2001

Instructions for Continued Airworthiness

Cessna 340A, N-98624, S/N 340A0064

With Weather Modification Equipment

1. Introduction: This major alteration obligates the aircraft operator to include the following maintenance information provided by this document in the owner/operators aircraft maintenance manual and the aircraft scheduled maintenance program.

2. Description: The weather modification equipment consists of two belly flare racks, two wing flare racks, one control panel, one telemetry radio, one telemetry antenna, one GPS antenna, and associated wiring. The function of the equipment is to be used in seeding clouds for rain enhancement.

3. Control information: The equipment is controlled via the control panel, which consists of some toggle, rotary, push button switches, and lights. The control panel in mounted under the co-pilots instrument panel. The panel and equipment is protected by a 15-amp circuit breaker located in the aircraft breaker panel labeled WX EQPT. The belly flare racks has one rotary switch, one left/right switch, and two push button switches. One switch for advancing the rack rotary selection switch and one for the firing. The wing racks have a rotary switch, a left/right, and a firing push button switch. An on/off power switch and a power lamp is provided. There are 12 led lamps to indicate the belly rack switch position, amber is number one position and 2 through 12 are green.

4. Servicing information: should there be a malfunction the only servicing required is to trouble shoot the electrical wiring, circuit breaker or switch.

5. Maintenance instructions: During periodic inspections the mounting, bolts, and wiring should be checked for security.

6. Troubleshooting information: See #4 above.

7. Removal and replacement information: See 337 dated this date, Aero Tech's E.A. 02-01~~001~~ dated February 25 2001.

8. Diagrams: There are no access plates to be removed for inspection.

9. Special inspection requirements: NA

10. Application of protective treatments: NA

11. Data: See item #7

12. List of special tools: NA

13. For commuter category aircraft: NA

14. Recommended overhaul periods: NA

15. Airworthiness limitation Section: There are no additional airworthiness limitations.

16. Revision: The Instructions for Continued Airworthiness (ICA) may be revised by submitting a letter to the local FSDO with a copy of the revised form 337 and revised ICA. The FAA inspector accepts the change by signing Block 3 and including the following statement: " The attached revised/new ICA dated_____ for the above aircraft or component major alteration have been accepted by the FAA, superceding the ICA dated_____ . Once the revision has been accepted, a maintenance record entry will be made, identifying the revision, its location and date of the 337 form.

17. Assistance: NA

18. Implementation and Record keeping: For major alterations performed in accordance with FAA Field Approval policy, the owner/operator operating under part 91 is responsible for ensuring that the ICA is made part of the applicable section 91.409 inspection program for their aircraft. This is accomplished when a maintenance entry in made in the aircraft's record in accordance with section 43.9. This entry records the major alteration and identifies the original ICA location. (e.g. Block 8 of form 337 dated 27 February 2001) along with inspection/maintenance requirements.

REVISED WEIGHT & BALANCE EQUIPMENT LIST

RESTRICTED CATEGORY

27 February 2001

AIRCRAFT MANUFACTURER: CESSNA
MODEL: 340A
SERIAL NUMBER: 340A-0064
REGISTRATION: N-98624
MAXIMUM TAKE-OFF WEIGHT: 5990.0
MAXIMUM RAMP WEIGHT: 5990.0

	WEIGHT	ARM	MOMENT
PREVIOUS W & B DATA DATED January 14 2000	4526.55	153.3	693939.75
REMOVED / INSTALLED THE FOLLOWING ITEMS:			
Two Belly Flare Racks	70.0	220	15400.0
Two Wing Flare Racks	24.0	184	4416.0
TELEMENTRY RADIO	10.0	237	2370.0
TELEMENTRY ANTENNA	0.5	260	130.0
CONTROL PANEL	2.0	116	232.0
GPS ANTENNA	0.5	252	126.0
REVISED WEIGHT & BALANCE DATA	4633.6	154.7	716613.75

NEW USEFUL LOAD= 1356.4 lb.

PREPARED BY: ROBERT REECE A/P 408585892 IA
REECE AIRCRAFT CO.
1878 REECE ROAD
SAN ANGELO, TX 76904
915-651-7882

E.A. 02-01001 SH.17

U.S. DEPARTMENT OF TRANSPORTATION
FEDERAL AVIATION ADMINISTRATION

STATEMENT OF COMPLIANCE WITH THE FEDERAL AVIATION REGULATIONS

DATE: February 25, 2001

AIRCRAFT OR AIRCRAFT COMPONENT IDENTIFICATION

MAKE	MODEL NO.	TYPE (Airplane, Radio, Helicopter, etc.)	NAME OF APPLICANT
Cessna	340A	Airplane	AeroTech Designs

LIST OF DATA

IDENTIFICATION	TITLE
Ref (A) EA 02-01001	Weather Modification, Inc. Aircraft registry number N98624, serial number 340A0064 is being modified for atmospheric testing. Weather Modification is seeking dual certification (standard and restricted). Repair/modify in accordance with Ref (A).

PURPOSE OF DATA

DER approval of engineering for the repair described above.

APPLICABLE REQUIREMENTS (Cite specific sections)

FAR part 23, Subparts C and D, primarily 23.301 through 23.305 and 23.603 through 23.609

CERTIFICATION - Under authority vested by direction of the Administrator and in accordance with conditions and limitations of appointment under Part 183 of the Federal Aviation Regulations, data listed above ~~and on attached sheets numbered~~ XXXXXXXXXXX have been examined in accordance with established procedures and found to comply with applicable requirements of the Federal Aviation Regulations.

I (We) Therefore ☐ Recommend approval of these data
☒ Approve these data

SIGNATURE(S) OF DESIGNATED ENGINEERING REPRESENTATIVE(S)	DESIGNATION NUMBER(S)	CLASSIFICATION(S)
RG Steenholdt R.G. STEENHOLDT	DERT-405177-CE	STRUCTURES

FAA Form 8110-3 (11-70) SUPERSEDES PREVIOUS EDITION

ENGINEERING AUTHORIZATION
02-01001

Rev.

AeroTech Designs
Structural Consultants to the Aviation Industry

Sheet 1 of 17

Name of Component					Original Issue Date
Hail Suppression Tests/Aircraft Modifications					February 25, 2001
Aircraft Type	Aircraft Model	Serial Number	Hours	Cycles	Latest Revision Date
Cessna	340A	340A0064	-	-	
FBO / Operator		Location	Classification		
Weather Modification, Inc.		Texas	■ Repair	☐ Modification	☐ New Design
Mfg. Part Number	Mfg. Serial No.	Design Engineer			
-	-	Randall G. Steenholdt (FAA / DER)			

Description:

The referenced aircraft will be modified per the following sections for the purpose of accomplishing atmospheric testing (hail suppression). Therefore, Weather Modification, Inc. is seeking to obtain dual certification status from the FAA. The specific aircraft will be modified via the following: 1) Wing mounted silver iodide generator, 2) Belly flare rack, 3) Wing flare rack, 4) Telemetry antenna, 5) Telemetry radio, 6) Wiring installation, 7) Generator control installation, 8) Belly flare rack selector installation, 9) Belly flare rack control box, and 10) Wing flare rack control.

WORK REQUIRED

General Notes

1. Accomplish modifications per applicable requirements and standard aviation practices outlined in AC 43.13-1A and -2A. This includes the securing of wire bundles.
2. Maintain minimum .25" diameter radii at all air frame cutouts.
3. Maintain minimum 2D edge margin (center of the fastener hole to the edge of the part).
4. Form, fit, and deburr all components.
5. Alodine and prime all aluminum parts per Cessna SRM standard procedures.
6. Fastener substitution acceptable as long as the strength meets or exceeds the specified hardware.
7. Apply PR1422 (or equivalent) fay sealant to all mating surfaces.
8. When the atmospheric equipment is removed (excluding the remaining wire bundles, telemetry antenna installation, and repair doublers), the aircraft is considered to be in the standard category. Reference documents WMI-N234PS-005 and WMI-N123KK-006, dated 6/4/96 for modification requirements for dual certification operation (standard and restricted).

Section I; Wing Mounted Silver Iodide Generator Installation

1. The silver iodide generator is constructed as shown in Figure I. Reference Figures II and III.
   - A) The (2) inboard stabilizers are made from elongated (1.180" x .5") .049" wall thickness 4130 annealed steel. The inboard stabilizers are 18.0" - 19.0" in length. Attach to forward and aft spars with AN3-5A bolts and mating nuts (in .190" -.194" diameter holes).
   - B) The end angles are made from 1" (each flange) x .125" (thickness) 1020 angle, 1.0" wide.
   - C) Weld the end attachment angles to the rail per AC 43.13-1A, Section 2 welding requirements for low carbon steel material.
   - D) Reference EA 01-96022 for fabrication of hoop fixtures.
2. The generator is attached to the lower wing via the forward and aft tip tank mounting locations.
   - A) Install an NAS6205-32 bolt and mating nut common to the forward attachment flange.
   - B) Install an AN4-6A bolt and mating nut common to the aft attachment flange.
   - C) The inboard stabilizers are attached to the forward and aft wing spars utilizing (2) AN3-5A bolts and mating nuts.
3. Minimally trim tank fairing as required to provide clearance for the generator fixture.
4. When not in the restricted category, remove the silver iodide generators.
   - A) Secure the wire bundles per AC 43.13-1A and -2A requirements.
   - B) Reinstall production bolts and hardware in wing tip attachment locations. Reinstall bolts and nuts in forward and aft wing spars at inboard stabilizer location.

E.A. Number
02-01001
Sheet 2

SUBSTANTIATION

1. The hoop fixtures and inboard stabilizers have been statically tested per EA 01-96022, and are structurally approved.
2. The ultimate potential loading of the generator can be calculated as follows: (70 lbs.) x (9 g's forward crash load) = 630 lbs.
3. The moment experienced at the (2) plate attachment locations (attaching the hoop fixtures to the vertical plate) can be calculated as follows: (630 lbs) x (5.5") = 3465 in-lbs. This is very conservative in that bending would not realistic occur.
4. Therefore, each lug attachment must be able to withstand 3465 ÷ 2 = 1733 lbs.
5. Per the Material Engineering manual, 1020 material has a tensile ultimate (Ftu) strength of 55 KSI. This is very similar to 1025 material. Per MIL-HDBK-5G, the bearing ultimate (Fbru) strength is 90 KSI @ 2.0 e/D.
6. The lug strength of the (2) attach points can be calculated as follows: (.125" material thickness) x (.250" hole diameter) x (90 KSI Fbru) = 2812 lbs./lug. Therefore, the (2) lugs exceed the ultimate potential load of the generator.
7. The attachment of the rail assembly to the production wing tip fuel tanks is material critical with respect to the 1020 material. Per step 6, the shear-out of the 1020 material (.125" thick) is 2812 lbs. With a total potential load of 630 lbs. (9-g crash load), the (2) attachment points common to the wing tip fuel tanks is structurally acceptable.
8. Welding is accomplished in accordance with AC 43.13-1A requirements.
9. At 70 lbs. installation weight and fuel weight of 7 lbs./gallon, this equates to 10 gallons of fuel reduction in the tip tanks to compensate for the installation weight. Fabricate and install (2) placards limiting fuel in the tip tanks (10 gallon reduction) when the silver iodide generator is installed.

Section II: Belly Flare Rack Installation

1. Reference Figure IV for fabrication of modification parts for the (3) belly flare racks and access doublers.
2. Attach the (3) flare racks (located side-by-side) at locations 192" and 240" aft of datum, spaced between the production stringers. The middle flare rack is installed at BL-0 of the belly skin.
3. At STA 170, cut out (3) 1.125" maximum diameter wire access holes in the fuselage skin centered in front of the flare racks.
4. Fabricate and install internal repair doublers around the access holes per Figure V.
   A) Maintain 125 AA surface finish.
   B) Maintain .127" .135" hole diameters.
   C) Alodine and prime per standard aviation practices.
   D) Apply PR1422 or equivalent fay sealnt prior to installation.
5. When not in the restricted category, remove the (3) belly flare racks.
   A) Reinstall (6) AN3 bolts and mating nuts at each flare rack attachment point.
6. Secure the reamining wire bundles per AC 43.13-1A and -2A requirements.
7. Cap the PT00E-1419S cannon plug to maintain pressurization.

SUBSTANTIATION

1. Belly flare rack installations have been previously approved/substantiated per EA 01-94002.
2. Fuselage skin strength loss can be calculated as follows: (.032" thickness) x (1.125" hole diameter) x (37 KSI Fsu) = 1332 lbs.
3. The repair doubler is made from .040" 2024-T3 material, therefore material strength has been met.
4. Per MIL-HDBK-5G, the bearing strength of MS20427AD4 rivets in .032" 2024-T3 material is 368 lbs. The bearing strength of a CR3243-4 (oversize 1/8" diameter blind rivet) is 398 lbs.
5. The number of repair fasteners per quadrant can be calculated as follows: 1332 lbs. ÷ 368 lbs./solid rivet = 3.6 or 4 solid rivets/quadrant. For blind fasteners in one of the quadrants: 1332 lbs. ÷ 398 lbs./blind oversized rivet = 3.3 or 4 blind rivets/quadrant.
6. The PT00E-1419S cannon plugs maintain stiffness and pressurization.

E.A. Number
02-01001
Sheet 3

Section III: Wing Flare Rack Installation

1. Reference Figure VI for fabrication and installation of wing flare racks.
2. The flare racks are installed on the upper surface of the wing skin (cradling the nacelles) centered between the production nacelle skin laps.
3. Pick up (4) existing lap joint fasteners (on the sides of the nacelles) with AN3-13A bolts, AN960-3 washers (one between the nacelle skin and flare rack and one under the nut), and mating nuts with .250" - .254" diameter holes.
4. Cut a 1.125" diameter hole in the lower aft inboard portion of the fiberglass tail fairing to provide access for the PT00E-14-19S cannon plug.
5. Secure the cannon plug with (4) manufacturer screws and structural sealant.
6. When not in the restricted category, remove the wing flare racks.
   A) Reinstall (4) AN4-4A bolts and mating nuts common to the nacelle skin laps.
   B) Disconnect the wiring and secure per AC 43.13-1A and -2A requirements.
   C) Cap the remaining cannon plug.

SUBSTANTIATION

1. Total weight of the flare rack and (12) flares is 12 lbs. The flares weigh 5 lbs. total and the rack assembly weighs 7 lbs.
2. Analysis will focus on the (12) flares extended aft of the flare rack assembly.
3. The ultimate potential load of the flare rack attachments can be derived by the moment of the flares as follows: (5 lbs.) x (9-g's crash load) x (9.0" moment arm length) = 405 in-lbs.
4. Therefore, each flare rack attachment point must be able to withstand: (405 in-lbs.) ÷ (4) = 102 in-lbs.
5. The .032" 2024-T3 lap joint material must be able to withstand a 102 in-lbs tension load. With AN970-4 washers utilized to increase the bearing surface, the tension capability of the skin can be calculated as follows: (.032" skin) x (.44 in^2 surface area of washer) x (60 KSI Ftu of 2024-T3) = 844 in-lbs. each attachment point.
6. The attachment of the flares to the aft rack assembly beam was previously statically tested and approved via EA 01-96022.
7. The access hole in the fairing panel, with the incoporation of the PT00E-14-19S cannon plug maintains the panel stiffness. The fairing panel is considered secondary structure.

Section IV: Telemetry Antenna Installation

1. Reference Figure VII for fabrication and installation requirements.
2. Cut out .75" maximum diameter hole in the belly of the fuselage skin, centered between the frames just aft of the aft edge of the main entry door (STA 252).
3. Fabricate repair doubler as noted in Figure VII.
   A) Maintain .127" - .135" diameter on all rivet holes and .55" - .80" typcial spacing (2D edge margin).
   B) Maintain hole tolerances for antenna attachment fasteners per manufacturer instructions.
   C) Maintain 125 AA surface finish.
   D) Alodine and prime per standard aviation practices.
4. Install repair doubler on interior surface installing fasteners as noted.

SUBSTANTIATION

1. Material strength loss can be calculated as follows: (.032" skin) x (.75" diameter hole) x (37 KSI Fsu) = 888 lbs.
2. One gage heavier repair doubler is incorporated, therefore repair strength has been met.
3. Per MIL-HDBK-5G, the bearing strength of an MS20427AD4 rivet in .032" 2024-T3 material is 368 lbs.
4. Number of repair fasteners required per quadrant can be calculated as follows: (888 lbs.) ÷ 368 lbs./fastener) = 2.4 or 3 rivets/quadrant minimum. The incorporated repair installs minimum 7.

E.A. Number
02-01001
Sheet 4

Section V: Telemetry Radio Installation

1. Reference Figure VIII for the installation of the telemetry radio.
2. Install (4) MS21059L3 or equivalent nutplates as shown in Figure VIII maintaining typical spacing for added fastener location.
   A) Install nutplates with (2) each MS20426AD3 rivets .098" -.103" diameter holes.
   B) Maintain .190" - .194" diameter attachment holes.
3. Install mounting fasteners as noted.
4. When not in the resticted category, remove the telemetry radio.
   A) reinstall (4) AN-3 bolts in attachment locations.
   B) Secure wire bundles per AC 43.13-1A and -2A.

SUBSTANTIATION

1. The ultimate load of the telemetry radio can be calculated as follows: (10 lbs) x (9-g's) = 90 lbs.
2. Four attachment fasteners greatly exceed the strength requirements to mount the telemetry radio.
3. The ultimate potential load is less than baggage which is intended to be carried in this area.

Section VI: Wiring Installation

1. Fabricate and install wiring access reinforcement doublers at STA 200 (L/H and R/H) 6.0" -8.0" below the floor line per Figure IX.
   A) Make from .040" 2024-T3 material.
   B) Maintain 125 AA surface finish.
   C) Maintain .127" - .135" diameter on fastener holes.
   D) Maintain .55" - .80" typical spacing and 2D minimum edge margin.
   E) Alodine and prime per standard aviation practices.
   F) Apply PR1422 or equivalent fay sealant prior to doubler installation.
2. Route wiring through as required.
3. Install S45A12 wire bundle pressurization fitting per AC 43.13-2A, Chapter 13.

SUBSTANTIATION

1. Strength loss can be calculated as follows: (.032" skin thickness) x (.75" diameter hole) x (37 KSI Fsu for 2024-T3 material) = 888 lbs.
2. Reference Section IV Substantiation for repair fastener requirements (solid rivets).
3. The installation of the S45A12 wire bundle pressurization fitting is per AC 43.13-2A, Chapter 13.

Section VII: Generator Control Installation

1. Reference Figure X for installation instructions/data.
2. Attach the noted equipment to the bottom edge of the copilot's instrument panel utilizing (2) standard trim screws. Layout to be determined by ergonomics.

SUBSTANTIATION

1. Even with a 9-g crash load, the miniscule weight imposes a negligible affect to the copilot's instrument panel.

E.A. Number
02-01001
Sheet 5

Section VIII: Belly Flare Rack Selector Installation

1. Reference Figure XI for installation instructions/data.
2. Attach the noted equipment to the bottom edge of the copilot's instrument panel utilizing (2) standard trim screws. Layout to be determined by ergonomics.

SUBSTANTIATION

1. Even with a 9-g crash load, the miniscule weight imposes a negligible affect to the copilot's instrument panel.

Section IX: Belly Flare Rack Control Box Installation

1. Reference Figure XI for installation instructions/data.
2. Attach the noted equipment to the bottom edge of the copilot's instrument panel utilizing (2) standard trim screws. Layout to be determined by ergonomics.

SUBSTANTIATION

1. Even with a 9-g crash load, the miniscule weight imposes a negligible affect to the copilot's instrument panel.

SectionIX: Wing Flare Rack Control Installation

1. Reference Figure XII for installation instructions/data.
2. Attach the noted equipment to the bottom edge of the copilot's instrument panel utilizing (2) standard trim screws. Layout to be determined by ergonomics.

SUBSTANTIATION

1. Even with a 9-g crash load, the miniscule weight imposes a negligible affect to the copilot's instrument panel.

E.A. Number
02-01001
Sheet 6

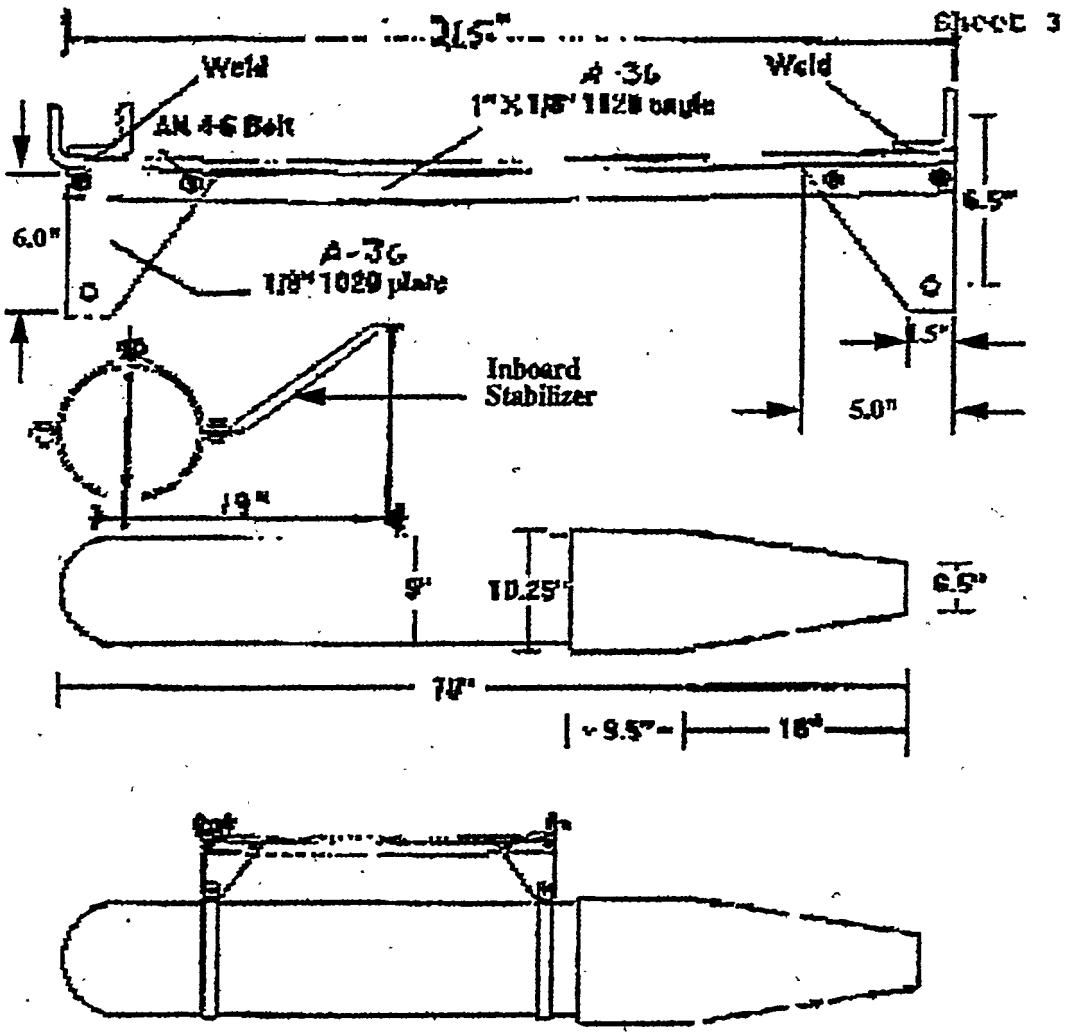

First: Wing fixture for Generator
Second: Two hoops secured around Generator and secured to fixture
Third: Silver-Iodide Generator
Fourth: Side view of Generator in hoops on fixture

Figure I

E.A. Number
02-01001
Sheet 7

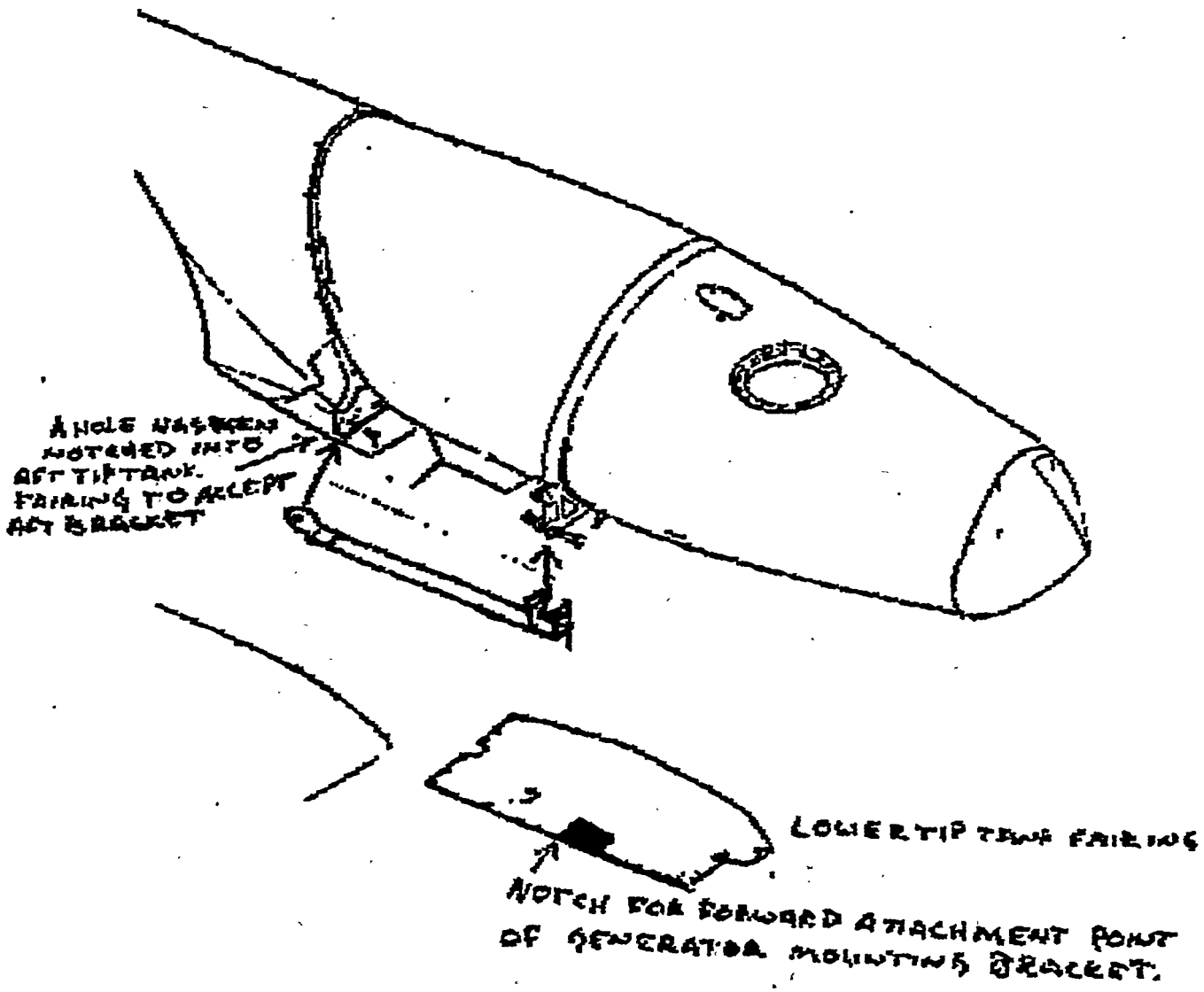

Figure II

E.A. Number
02-01001
Sheet 8

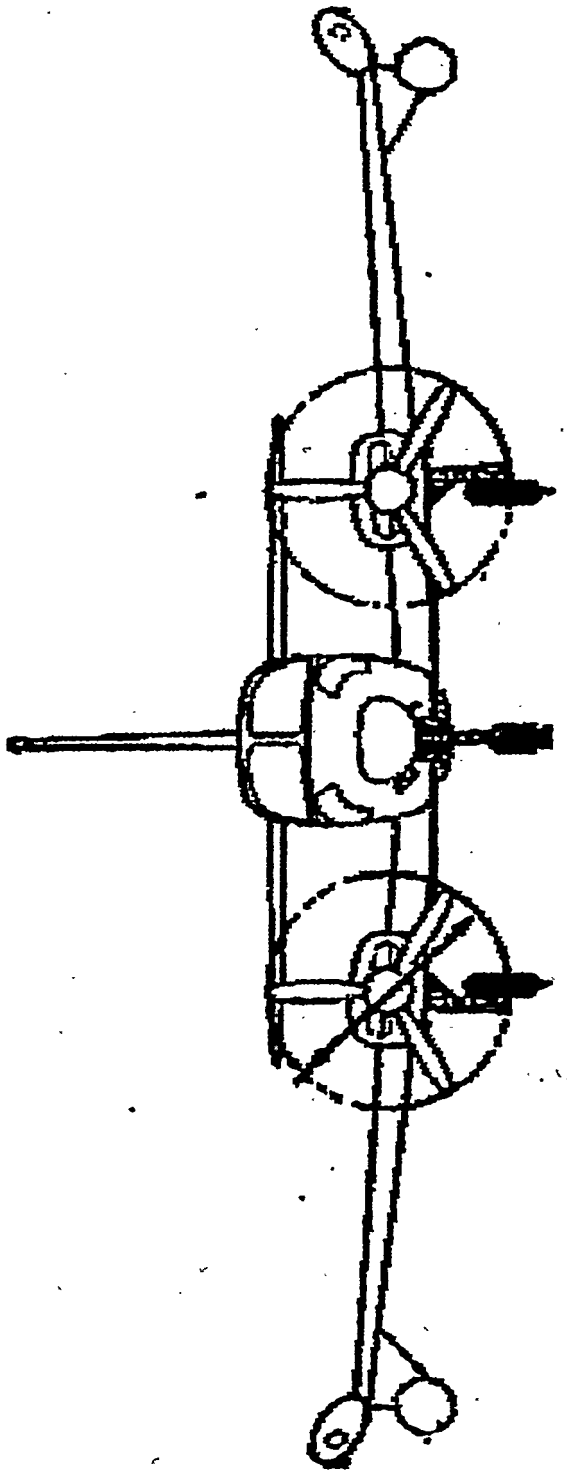

FRONT VIEW OF AIRFRAME GENERATORS
(GENERATORS NOT DRAWN TO SCALE

Figure III

E.A. Number
02-01001
Sheet 9

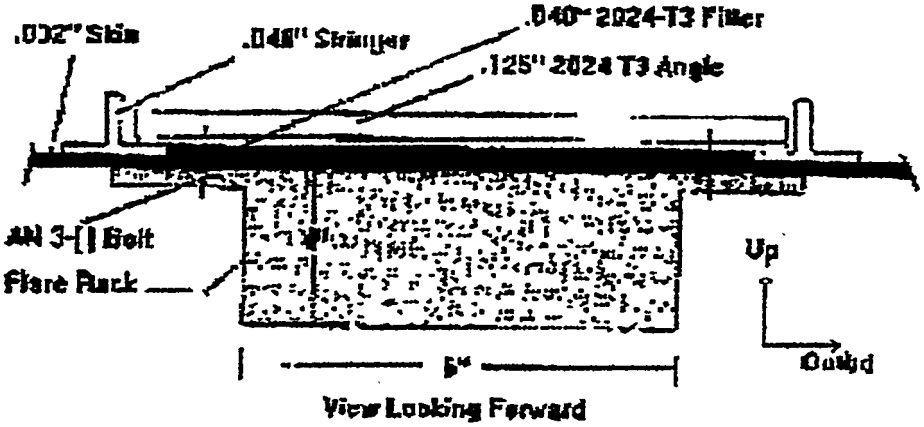

Figure IV

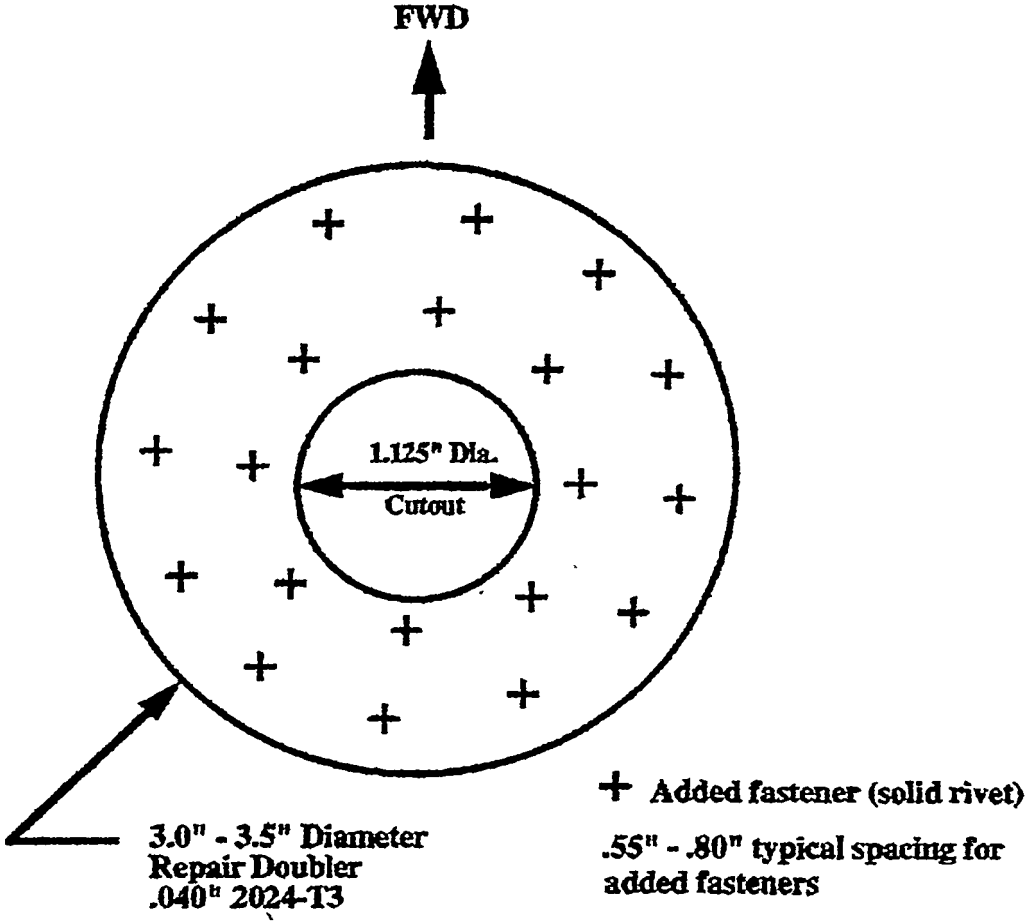

Figure V

E.A. Number
02-01001
Sheet 10

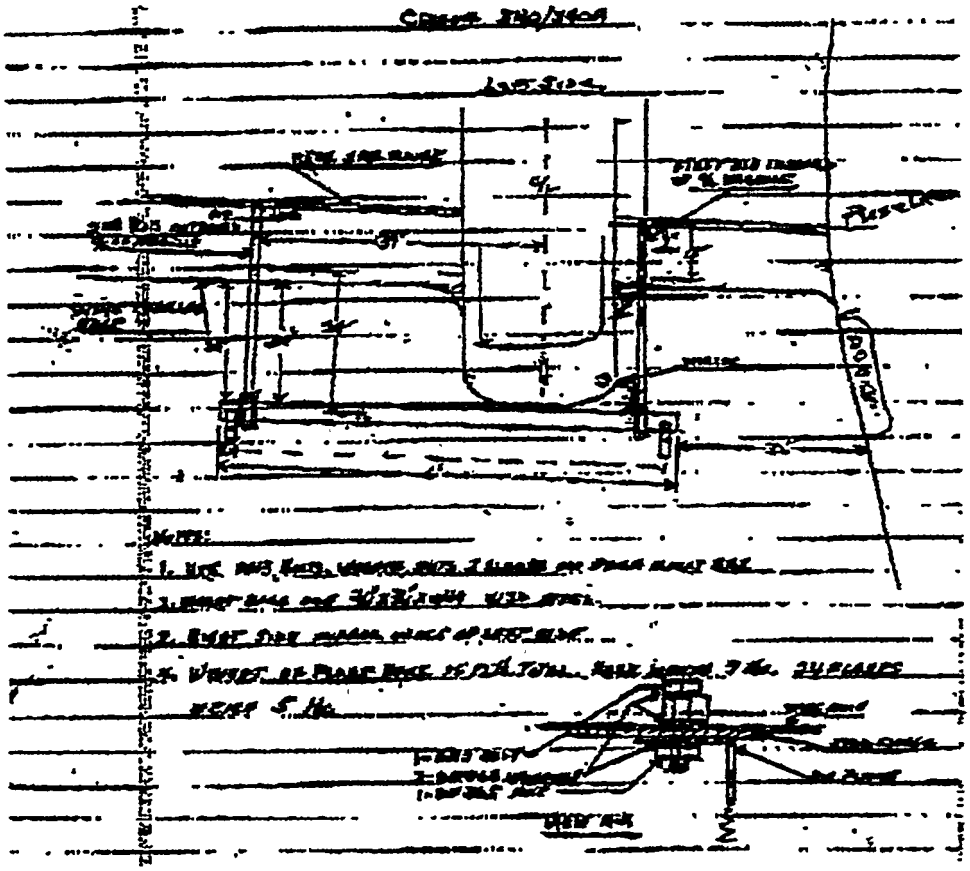

STOP VIEW MOUNTING BARS

Figure VI

E.A. Number
02-01001
Sheet 11

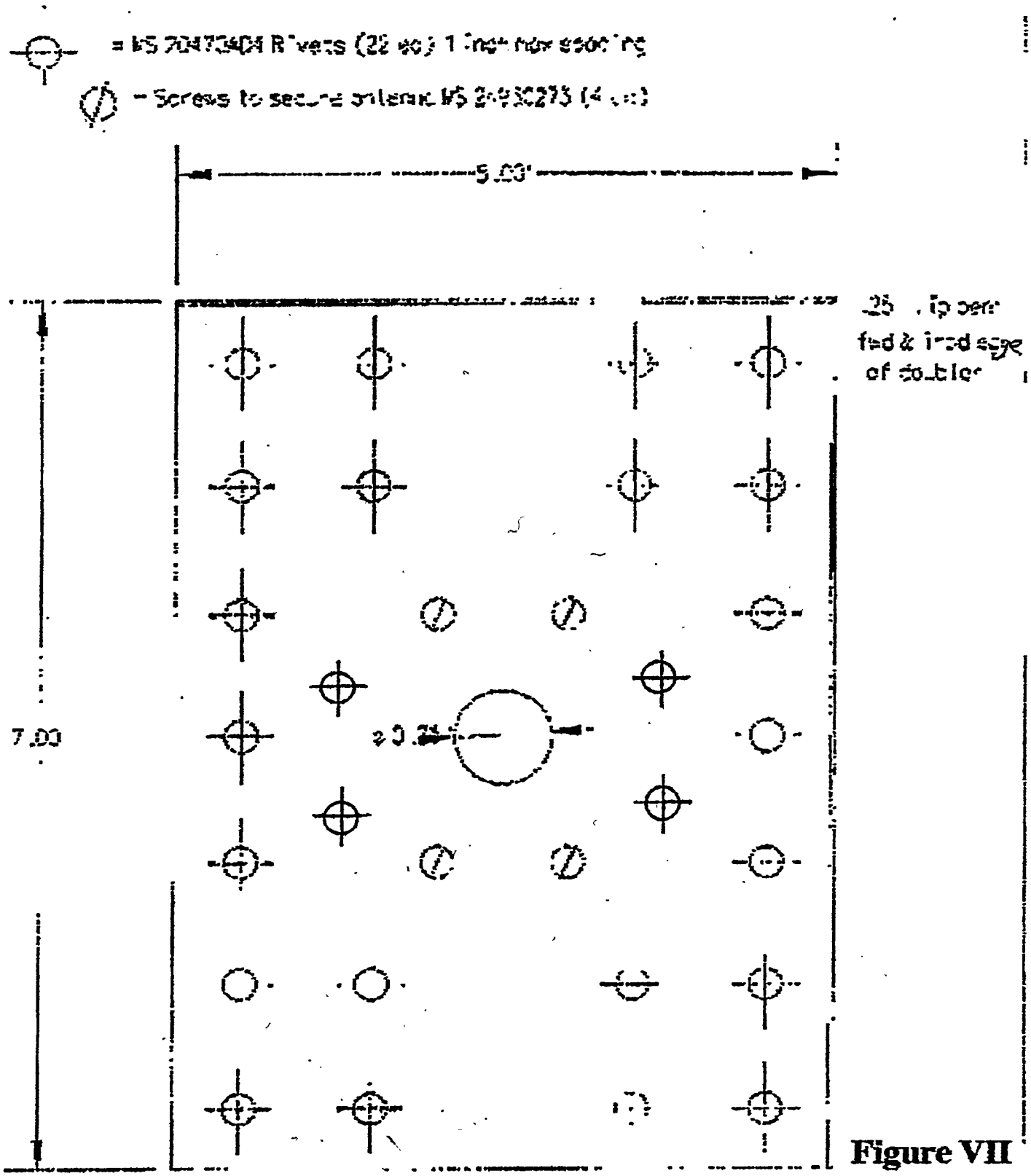

Figure VII

E.A. Number
02-01001
Sheet 12

Figure VIII

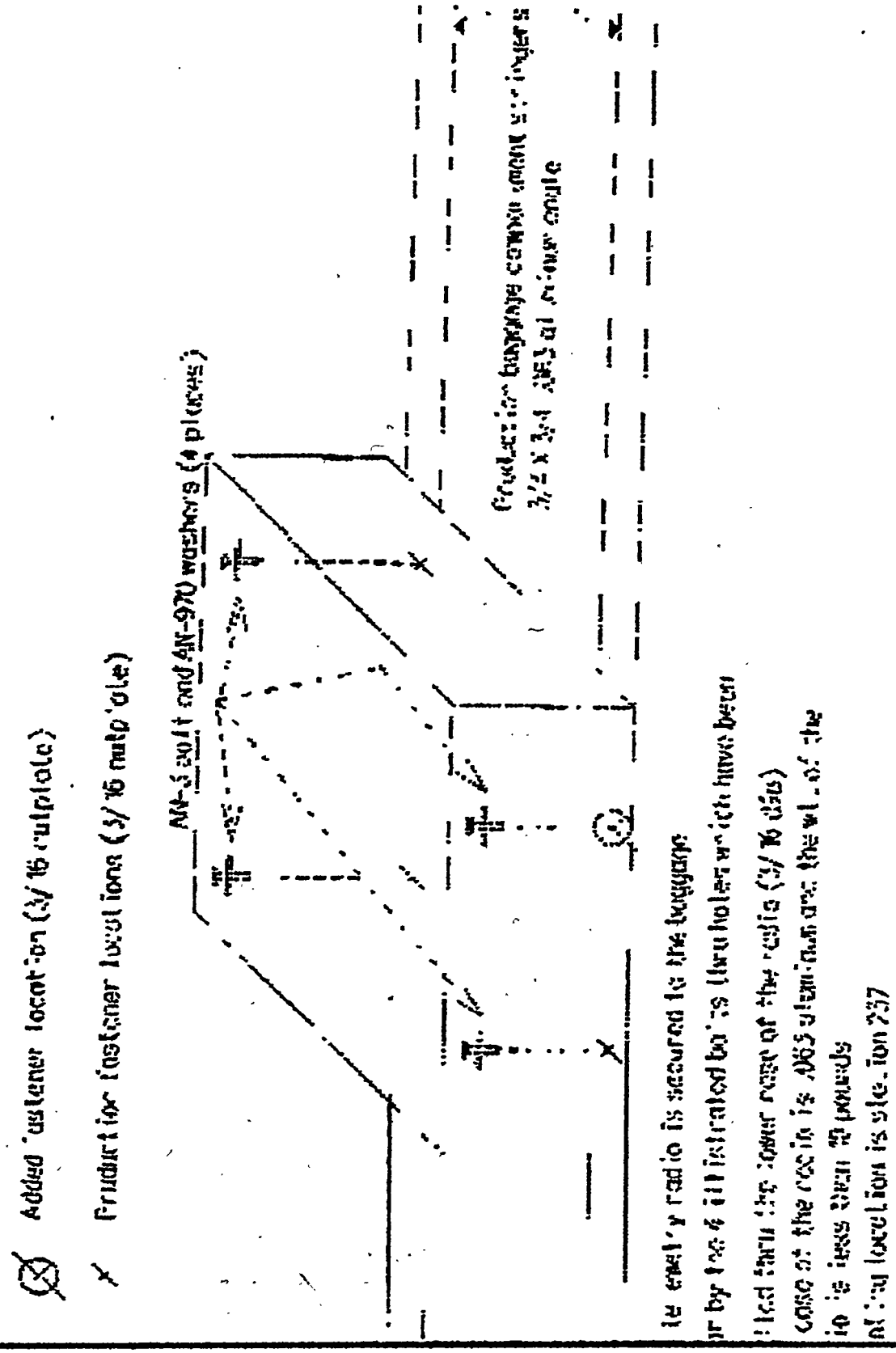

E.A. Number
02-01001
Sheet 13

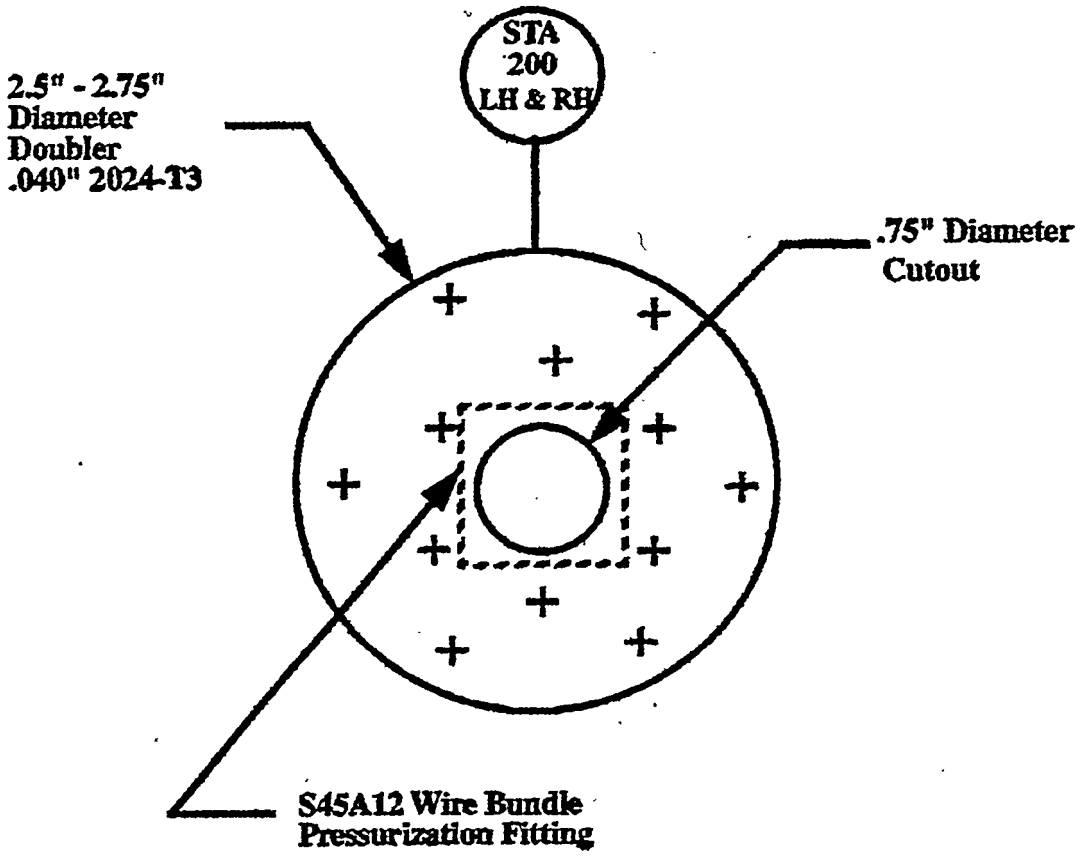

+: Added fastener location; install MS20470AD4

Figure IX

E.A. Number
02-01001
Sheet 14

Generator Control Installation

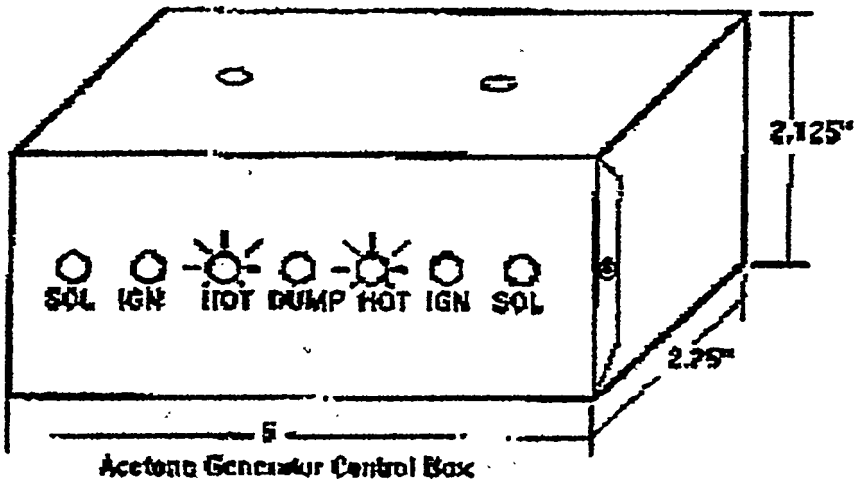

Acetone Generator Control Box

The acetone generator control box is a sheet metal box secured to the bottom edge of the instrument panel using trim screws. The box has two nine pin electrical connectors mounted. The box weighs less than .5 lb.

Figure X

E.A. Number
02-01001
Sheet 15

6. Belly flare rack control installation

a) The belly rack selector, shown below, is secured to the bottom edge of the copilots instrument panel by two trim screws. The box has a 15 pin input connector and an output plug for each flare rack installed. The unit weighs .75 lbs

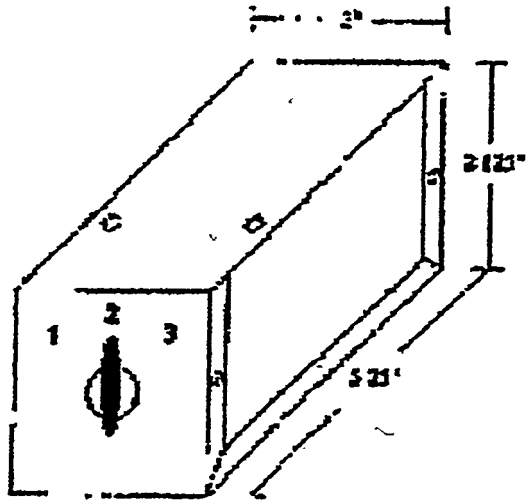

b) Belly flare rack control box, shown below is secured to the bottom edge of the copilots instrument panel by two trim screws. The box has one 15 pin connector and four wires. The unit weighs .5 lbs.

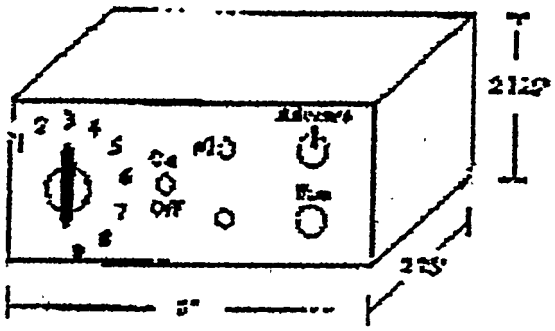

Figure XI

E.A. 02-01001 SH.17

U.S. DEPARTMENT OF TRANSPORTATION
FEDERAL AVIATION ADMINISTRATION

STATEMENT OF COMPLIANCE WITH THE FEDERAL AVIATION REGULATIONS

DATE: February 25, 2001

AIRCRAFT OR AIRCRAFT COMPONENT IDENTIFICATION

MAKE	MODEL NO.	TYPE (Airplane, Radio, Helicopter, etc.)	NAME OF APPLICANT
Cessna	340A	Airplane	AeroTech Designs

LIST OF DATA

IDENTIFICATION	TITLE
Ref (A) EA 02-01001	Weather Modification, Inc. Aircraft registry number N98624, serial number 340A0064 is being modified for atmospheric testing. Weather Modification is seeking dual certification (standard and restricted). Repair/modify in accordance with Ref (A).

PURPOSE OF DATA

DER approval of engineering for the repair described above.

APPLICABLE REQUIREMENTS (List specific sections)

FAR part 23, Subparts C and D, primarily 23.301 through 23.305 and 23.603 through 23.609

CERTIFICATION - Under authority vested by direction of the Administrator and in accordance with conditions and limitations of appointment under Part 183 of the Federal Aviation Regulations, data listed above ~~and on attached sheets numbered~~ XXXXXXXXXXXX have been examined in accordance with established procedures and found to comply with applicable requirements of the Federal Aviation Regulations.

I (We) Therefore ☐ Recommend approval of these data
☒ Approve these data

SIGNATURE(S) OF DESIGNATED ENGINEERING REPRESENTATIVE(S)	DESIGNATION NUMBER(S)	CLASSIFICATION(S)
R.G. Steenholdt R.G. STEENHOLDT	DERT-405177-CE	STRUCTURES

FAA Form 8110-3 (11-70) SUPERSEDES PREVIOUS EDITION

MBS

US Department of Transportation
Federal Aviation Administration

MAJOR REPAIR AND ALTERATION
(Airframe, Powerplant, Propeller, or Appliance)

Form Approved
OMB No. 2120-0020

For FAA Use Only

Office Identification MBS
WP07

INSTRUCTIONS: Print or type all entries. See FAR 43.9, FAR 43 Appendix B, and AC 43.9-1 (or subsequent revision thereof) for instructions and disposition of this form. This report is required by law (49 U.S.C. 1421). Failure to report can result in civil penalty not to exceed $1,000 for each such violation (Section 901 Federal Aviation Act of 1958).

1. Aircraft	Make CESSNA	Model 340A
	Serial No. 340A0064	Nationality and Registration Mark N98624
2. Owner	Name *(As shown on registration certificate)* SANTUARY WINSLOW RD	Address *(As shown on registration certificate)* P.O BOX 2909 EDWARDS, CO 81632-2909

3. For FAA Use Only

4. Unit Identification / **5. Type**

Unit	Make	Model	Serial No.	Repair	Alteration
AIRFRAME	*(As described in Item 1 above)*				X
POWERPLANT					
PROPELLER					
APPLIANCE	Type Manufacturer				

6. Conformity Statement

A. Agency's Name and Address	B. Kind of Agency		C. Certificate No.
ANTHONY CUTAIA 1501 E WESCOTT DR PHOENIX, AZ 85024	X	U.S. Certificated Mechanic	AP527633640IA
		Foreign Certificated Mechanic	
		Certificated Repair Station	
		Manufacturer	

D. I certify that the repair and/or alteration made to the unit(s) identified in item 4 above and described on the reverse or attachments hereto have been made in accordance with the requirements of Part 43 of the U.S. Federal Aviation Regulations and that the information furnished herein is true and correct to the best of my knowledge.

Date	Signature of Authorized Individual
1/14/00	

7. Approval for Return To Service

Pursuant to the authority given persons specified below, the unit identified in item 4 was inspected in the manner prescribed by the Administrator of the Federal Aviation Administration and is ☒ APPROVED ☐ REJECTED

BY							
		FAA Flt. Standards Inspector		Manufacturer	X	Inspection Authorization	Other *(Specify)*
		FAA Designee		Repair Station		Person Approved by Transport Canada Airworthiness Group	

Date of Approval or Rejection	Certificate or Designation No.	Signature of Authorized Individual
1/14/00	AP527633640IA	

FAA Form 337 (12-88)

NOTICE

Weight and balance or operating limitation changes shall be entered in the appropriate aircraft record. An alteration must be compatible with all previous alterations to assure continued conformity with the applicable airworthiness requirements.

8. Description of Work Accomplished
(If more space is required, attach additional sheets. Identify with aircraft nationality and registration mark and date work completed.)

1/14/00 N98624 CESSNA 340A0064 HOBBS 245.5 A/C T.T 4975.5

INSTALLED ROSEN SUN VISORS PER STC# SA5137NM PER INSTRUCTIONS.
INSTALLED AIRBORNE DRY AIR PUMP KIT 400-2 PER STC# SA107GL INSTRUCTIONS.
WEIGHT AND BALANCE HAS BEEN REVISED TO REFLECT THIS CHANGE.
----------END----------

| | Additional Sheets Are Attached

* U.S.G.P.O. 1990-761-753

U.S Department of Transportation
Federal Aviation Administration

MAJOR REPAIR AND ALTERATION
(Airframe, Powerplant, Propeller, or Appliance)

Form Approved
OMB No 2120-0020

For FAA Use Only

Office Identification WP07 m85

INSTRUCTIONS: Print or type all entries. See FAR 43.9, FAR 43 Appendix B, and AC 43.9-1 (or subsequent revision thereof) for instructions and disposition of this form. This report is required by law (49 U.S.C 1421) Failure to report can result in a civil penalty not to exceed $1,000 for each such violation (Section 901 Federal Aviation Act 1958)

1. Aircraft	Make **CESSNA**	Model **340A**
	Serial No **340A-0064**	Nationality and Registration Mark **N98624**
2. Owner	Name *(As shown on registration certificate)* **THE SANCTUARY INTERNATIONAL, INC.**	Address *(As shown on registration certificate)* **1561 ALPHA WINSLOW ROAD** **EDWARDS, CO. 81632**

3. For FAA Use Only

4. Unit Identification / **5. Type**

Unit	Make	Model	Serial No	Repair	Alteration
AIRFRAME	*(As described in Item 1 above)*				X
POWERPLANT					
PROPELLER					
APPLIANCE	Type				
	Manufacturer				

6. Conformity Statement

A. Agency's Name and Address	B. Kind of Agency	C. Certificate No.
SAWYER AVIATION **2602 E SKY HARBOR BLVD**	☐ U.S. Certified Mechanic ☐ Foreign Certified Mechanic ☒ Certified Repair Station ☐ Manufacturer	**CRS EIPR553D**

D I certify that the repair and/or alteration made to the unit(s) identified in item 4 above and described on the reverse or attachments hereto have been made in accordance with the requirements of Part 43 of the U.S. Federal Aviation Regulations and that the information furnished herein is true and correct to the best of my knowledge.

Date	Signature of Authorized Individual
12/18/98	John J. Morris

7. Approval for Return to Service

Pursuant to the authority given persons specified below, the unit identified in item 4 was inspected in the manner prescribed by the Administrator of the Federal Aviation Administration and is ☒ APPROVED ☐ REJECTED

BY

☐	FAA Flt Standards Inspector	☐	Manufacturer	☐	Inspection Authorization
☐	FAA Designee	☒	Repair Station	☐	Person Approved by Transport Canada Airworthiness Group

Other *(Specify)*

Date of Approval or Rejection	Certificate or Designation No.	Signature of Authorized Individual
12/18/98	**EIPR553D**	John J. Morris

FAA Form 337 (12-88)

NOTICE

Weight and balance or operating limitation changes shall be entered in the appropriate aircraft record. An alteration must be compatible with all previous alterations to assure continued conformity with the applicable airworthiness requirements.

8. Description of Work Accomplished

(If more space is required, attach additional sheets. Identify with aircraft nationality and registration mark and date work completed.)

N98624 CESSNA 340A 340A-0064

INSTALLED CLEVELAND CONVERSION KIT P/N 199-76, REVISION E, IN ACCORDANCE WITH INSTALLATION DRAWING 50-47, REVISION E, DATED FEBRUARY 25, 1983, OR LATER FAA APPROVED REVISIONS PER STC SA 664GL.. NO CHANGE IN WEIGHT AND BALANCE. REFER TO CLEVELAND MAINTENANCE MANUAL FOR CONTINUED AIRWORTHINESS.

----------END----------

☒ Additional Sheets Are Attached

United States of America

Department of Transportation—Federal Aviation Administration

Supplemental Type Certificate

Number SA664GL

This certificate, issued to Aircraft Wheel and Brake Division
Parker Hannifin Corporation
1160 Center Road
Avon, OH 44011

certifies that the change in the type design for the following product with the limitations and conditions therefor as specified hereon meets the airworthiness requirements of Part 3* *of the* Civil Air *Regulations.* * effective May 15, 1956 (refer to Type Certificate Data Sheet No. 3A25 for complete certification basis).

Original Product—Type Certificate Number: 3A25
Make: Cessna
Model: 340, 340A

Description of Type Design Change:

Install Cleveland Conversion Kit P/N 199-76, revision E, in accordance with Installation Drawing 50-47, revision E, dated February 25, 1983, or later FAA approved revisions.

Limitations and Conditions:

This approval should not be extended to other aircraft of these models on which other previously approved modifications are incorporated unless it is determined by the installer that the interrelationship between this change and any of those other previously approved modifications will introduce no adverse effect upon the airworthiness of the aircraft.

This certificate and the supporting data which is the basis for approval shall remain in effect until surrendered, suspended, revoked, or a termination date is otherwise established by the Administrator of the Federal Aviation Administration.

Date of application: December 21, 1982 *Date reissued:*

Date of issuance: February 24, 1983 *Date amended:*

By direction of the Administrator

W. F. Horn *(Signature)*
Manager, Chicago Aircraft Certification Office
Central Region, ACE-115C
(Title)

Any alteration of this certificate is punishable by a fine of not exceeding $1,000, or imprisonment not exceeding 3 years, or both.

This certificate may be transferred in accordance with FAR 21.47.

FAA Form 8110-2 (10-68)

UNITED STATES OF AMERICA
DEPARTMENT OF TRANSPORTATION—FEDERAL AVIATION ADMINISTRATION

STANDARD AIRWORTHINESS CERTIFICATE

1 NATIONALITY AND REGISTRATION MARKS	2 MANUFACTURER AND MODEL	3 AIRCRAFT SERIAL NUMBER	4 CATEGORY
N98624.	Cessna, 340A.	340A0064.	Normal.

5 AUTHORITY AND BASIS FOR ISSUANCE

This airworthiness certificate is issued pursuant to the Federal Aviation Act of 1958 and certifies that, as of the date of issuance, the aircraft to which issued has been inspected and found to conform to the type certificate therefor, to be in condition for safe operation, and has been shown to meet the requirements of the applicable comprehensive and detailed airworthiness code as provided by Annex 8 to the Convention on International Civil Aviation, except as noted herein

Exceptions

except Subpart B and paragraphs 3.437(a)(b)(c), (d)(f), 3.581 and 3.666 of CAR-Part 3.

6 TERMS AND CONDITIONS

Unless sooner surrendered, suspended, revoked, or a termination date is otherwise established by the Administrator, this airworthiness certificate is effective as long as the maintenance, preventative maintenance, and alterations are performed in accordance with Parts 21, 43, and 91 of the Federal Aviation Regulations, as appropriate, and the aircraft is registered in the United States

DATE OF ISSUANCE	FAA REPRESENTATIVE	DESIGNATION NUMBER
20, May 1997.	Alan K. FERGUSON, Alan K. Ferguson	DART950015EA.

Any alteration, reproduction or misuse of this certificate may be punishable by a fine not exceeding $1,000, or imprisonment not exceeding 3 years, or both THIS CERTIFICATE MUST BE DISPLAYED IN THE AIRCRAFT IN ACCORDANCE WITH APPLICABLE FEDERAL AVIATION REGULATIONS

FAA Form 8100-2 (8-82)

☆ U.S. GOVERNMENT PRINTING OFFICE: 1992 - 769-205

Form Approved
O.M.B. No. 2120-0018

US Department of Transportation
Federal Aviation Administration

APPLICATION FOR AIRWORTHINESS CERTIFICATE

INSTRUCTIONS — Print or type. Do not write in shaded areas; these are for FAA use only. Submit original only to an authorized FAA Representative. If additional space is required, use an attachment. For special flight permits complete Sections II and VI or VII as applicable.

I. AIRCRAFT DESCRIPTION

1. REGISTRATION MARK: N98624.	2. AIRCRAFT BUILDER'S NAME (Make): Cessna Aircraft Co.	3. AIRCRAFT MODEL DESIGNATION: 340A.	4. YR MFR: 1976.
5. AIRCRAFT SERIAL NO: 340A0064.	6. ENGINE BUILDER'S NAME (Make): Teledyne-Continental,	7. ENGINE MODEL DESIGNATION: TSIO-520-NB.	FAA CODING: 2076405 / 17246
8. NUMBER OF ENGINES: --- TWO ---	9. PROPELLER BUILDER S NAME (Make): McCauley,	10. PROPELLER MODEL DESIGNATION: 3AF32C505/ 82NEA-6.5	11. AIRCRAFT IS (Check if applicable): IMPORT

II. CERTIFICATION REQUESTED

APPLICATION IS HEREBY MADE FOR: (Check applicable items)

A	1	X	STANDARD AIRWORTHINESS CERTIFICATE (Indicate category)	X	NORMAL		UTILITY		ACROBATIC		TRANSPORT		GLIDER		BALLOON
B			SPECIAL AIRWORTHINESS CERTIFICATE (Check appropriate items)												
	2		LIMITED												
	5		PROVISIONAL (Indicate class)	1		CLASS I									
				2		CLASS II									
	3		RESTRICTED (Indicate operation(s) to be conducted)	1		AGRICULTURE AND PEST CONTROL		2		AERIAL SURVEYING		3		AERIAL ADVERTISING	
				4		FOREST (Wildlife conservation)		5		PATROLLING		6		WEATHER CONTROL	
				7		CARRIAGE OF CARGO		0		OTHER (Specify)					
	4		EXPERIMENTAL (Indicate operation(s) to be conducted)	1		RESEARCH AND DEVELOPMENT		2		AMATEUR BUILT		3		EXHIBITION	
				4		RACING		5		CREW TRAINING				MKT SURVEY	
				0		TO SHOW COMPLIANCE WITH FAR									
	8		SPECIAL FLIGHT PERMIT (Indicate operation to be conducted, then complete Section VI or VII as applicable on reverse side)	1		FERRY FLIGHT FOR REPAIRS, ALTERATIONS, MAINTENANCE OR STORAGE									
				2		EVACUATE FROM AREA OF IMPENDING DANGER									
				3		OPERATION IN EXCESS OF MAXIMUM CERTIFICATED TAKE-OFF WEIGHT									
				4		DELIVERING OR EXPORT		5		PRODUCTION FLIGHT TESTING					
				6		CUSTOMER DEMONSTRATION FLIGHTS									
C	6		MULTIPLE AIRWORTHINESS CERTIFICATE (Check ABOVE "Restricted Operation" and "Standard" or "Limited", as applicable)												

III. OWNER'S CERTIFICATION

A. REGISTERED OWNER (As shown on certificate of aircraft registration) — IF DEALER, CHECK HERE →

NAME: Davenport Company.

ADDRESS: R.R.-4, Mt. Vernon Airport, Mt. Vernon, Illinois, 62864. USA.

B. AIRCRAFT CERTIFICATION BASIS (Check applicable blocks and complete items as indicated)

X	AIRCRAFT SPECIFICATION OR TYPE CERTIFICATE DATA SHEET (Give No and Revision No.): 3A25, Revision No. 25.	X	AIRWORTHINESS DIRECTIVES (Check if all applicable AD's complied with and give latest AD No.): Bi-weekly No. 97-09.
	AIRCRAFT LISTING (Give page number(s)): N/A.	X	SUPPLEMENTAL TYPE CERTIFICATE (List number of each STC incorporated): SA4934NM.

C. AIRCRAFT OPERATION AND MAINTENANCE RECORDS

X	CHECK IF RECORDS IN COMPLIANCE WITH FAR ~~91.173~~. 91.417	TOTAL AIRFRAME HOURS: 4,680:07 Hours.	3 EXPERIMENTAL ONLY (Enter hours flown since last certificate issued or renewed): N/A.

D. CERTIFICATION — I hereby certify that I am the registered owner (or his agent) of the aircraft described above, that the aircraft is registered with the Federal Aviation Administration in accordance with Section 501 of the Federal Aviation Act of 1958, and applicable Federal Aviation Regulations, and that the aircraft has been inspected and is airworthy and eligible for the airworthiness certificate requested.

DATE OF APPLICATION	NAME AND TITLE (Print or type)	SIGNATURE
20, May 1997	Michiel Kneefel, Authorized - Representative.	

IV. INSPECTION AGENCY VERIFICATION

A. THE AIRCRAFT DESCRIBED ABOVE HAS BEEN INSPECTED AND FOUND AIRWORTHY BY. (Complete this ... on only if FAR 21.183(d) applies)

2	FAR PART 121 OR 127 CERTIFICATE HOLDER (Give Certificate No.): N/A.	3 X	CERTIFICATED MECHANIC (Give Certificate No.): A&P 2445402.	6	CERTIFICATED REPAIR STATION (Give Certificate No.): N/A.
5	AIRCRAFT MANUFACTURER (Give name of firm): N/A.				

DATE	TITLE	SIGNATURE
20, May 1997.	Michiel Kneefel, Certificated-Mechanic.	

V. FAA REPRESENTATIVE CERTIFICATION

(Check ALL applicable blocks in items A and B)

A. I find that the aircraft described in Section I or VII meets requirements for: X THE CERTIFICATE REQUESTED; 4 AMENDMENT OR MODIFICATION OF CURRENT AIRWORTHINESS CERTIFICATE

B. Inspection for a special flight permit under Section VII was conducted by: FAA INSPECTOR; X FAA DESIGNEE; CERTIFICATE HOLDER UNDER; FAR 65; FAR 121, 127 or 135; FAR 145

DATE	DISTRICT OFFICE	4 DESIGNEE S SIGNATURE AND NO	1 FAA INSPECTOR S SIGNATURE
20, MAY 1997.	AEA-FRA-IFO, EA-33.	Alan K. FERGUSON, DART950015EA. Alan K. Ferguson	

VI. PRODUCTION FLIGHT TESTING

A. MANUFACTURER

NAME	ADDRESS

B. PRODUCTION BASIS *(Check applicable item)*

- [ ] PRODUCTION CERTIFICATE *(Give production certificate number)*
- [ ] TYPE CERTIFICATE ONLY
- [ ] APPROVED PRODUCTION INSPECTION SYSTEM

C. GIVE QUANTITY OF CERTIFICATES REQUIRED FOR OPERATING NEEDS →

DATE OF APPLICATION	NAME AND TITLE *(Print or type)*	SIGNATURE

VII. SPECIAL FLIGHT PERMIT PURPOSES OTHER THAN PRODUCTION FLIGHT TEST

A. DESCRIPTION OF AIRCRAFT

	REGISTERED OWNER	ADDRESS
X	BUILDER *(Make)* CESSNA Aircraft Company.	MODEL 340-A.
	SERIAL NUMBER 340A0064.	REGISTRATION MARK N98624.

B. DESCRIPTION OF FLIGHT CUSTOMER DEMONSTRATION FLIGHTS ☐ *(Check if applicable)*

	FROM	TO	
	VIA	DEPARTURE DATE	DURATION

C. CREW REQUIRED TO OPERATE THE AIRCRAFT AND ITS EQUIPMENT

- [ ] PILOT
- [ ] CO-PILOT
- [ ] NAVIGATOR
- [ ] OTHER *(Specify)*

D. THE AIRCRAFT DOES NOT MEET THE APPLICABLE AIRWORTHINESS REQUIREMENTS AS FOLLOWS

E. THE FOLLOWING RESTRICTIONS ARE CONSIDERED NECESSARY FOR SAFE OPERATION *(Use attachment if necessary)*

F. CERTIFICATION — I hereby certify that I am the registered owner (or his agent) of the aircraft described above, that the aircraft is registered th the Federal Aviation Administration in accordance with Section 501 of the Federal Aviation Act of 1958, and applicable Federal Aviation Regulations and that the aircraft has been inspected and is airworthy for the flight described.

DATE	NAME AND TITLE *(Print or type)*	SIGNATURE

VIII. AIRWORTHINESS DOCUMENTATION (FAA use only)

X	A. Operating Limitations and Markings in Compliance with FAR 91.9 ~~91.31~~ as Applicable		G. Statement of Conformity, FAA Form 8130-9 *(Attach when required)*
	B. Current Operating Limitations Attached		H. Foreign Airworthiness Certification for Import Aircraft *(Attach when required)*
	C. Data, Drawings, Photographs, etc. *(Attach when required)*	X	I. Previous Airworthiness Certificate Issued in Accordance with FAR 21.329 CAR 3. 21.183(a) & *(Original Attached)*
X	D. Current Weight and Balance Information Available in Aircraft		
	E. Major Repair and Alteration, FAA Form 337 *(Attach when required)*	X	J. Current Airworthiness Certificate Issued in Accordance with FAR 21.183(d). *(Copy attached)*
X	F. This Inspection Recorded in Aircraft Records		

US Department of Transportation
Federal Aviation Administration

MAJOR REPAIR AND ALTERATION
(Airframe, Powerplant, Propeller, or Appliance)

Form Approved
OMB No. 2120-0020

For FAA Use Only

Office Identification: ACE-FSDO-07 Wichita, Kansas

INSTRUCTIONS: Print or type all entries. See FAR 43.9, FAR 43 Appendix B, and AC 43.9-1 (or subsequent revision thereof) for instructions and disposition of this form. This report is required by law (49 U.S.C. 1421). Failure to report can result in a civil penalty not to exceed $1,000 for each such violation (Section 901 Federal Aviation Act of 1958).

1. Aircraft	Make: CESSNA	Model: 340A
	Serial No.: 340A0064	Nationality and Registration Mark: N98624
2. Owner	Name *(As shown on registration certificate)*: Ralph Lowry Aircraft Sales	Address *(As shown on registration certificate)*: P.O. Box 688, Newton, KS 67114

3. For FAA Use Only

4. Unit Identification / **5. Type**

Unit	Make	Model	Serial No.	Repair	Alteration
AIRFRAME	*(As described in Item 1 above)*				X
POWERPLANT					
PROPELLER			RECEIVED		
APPLIANCE	Type		AUG 28 1997		
	Manufacturer		ICT FSDO Wichita, Kansas		

6. Conformity Statement

A. Agency's Name and Address	B. Kind of Agency	C. Certificate No.
Larry Koehn Midwest Aircraft Services, Inc. P.O. Box 788 Newton, KS 67114	X U.S. Certificated Mechanic Foreign Certificated Mechanic Certificated Repair Station Manufacturer	A&P 510628416

D. I certify that the repair and/or alteration made to the unit(s) identified in item 4 above and described on the reverse or attachments hereto have been made in accordance with the requirements of Part 43 of the U.S. Federal Aviation Regulations and that the information furnished herein is true and correct to the best of my knowledge.

Date	Signature of Authorized Individual
8-27-97	Larry Koehn

7. Approval for Return To Service

Pursuant to the authority given persons specified below, the unit identified in item 4 was inspected in the manner prescribed by the Administrator of the Federal Aviation Administration and is ☒ APPROVED ☐ REJECTED

BY						
	FAA Flt. Standards Inspector		Manufacturer	X	Inspection Authorization	Other *(Specify)*
	FAA Designee		Repair Station		Person Approved by Transport Canada Airworthiness Group	

Date of Approval or Rejection	Certificate or Designation No.	Signature of Authorized Individual
8-27-97	510628416	Larry Koehn

FAA Form 337

NOTICE

Weight and balance or operating limitation changes shall be entered in the appropriate aircraft record. An alteration must be compatible with all previous alterations to assure continued conformity with the applicable airworthiness requirements.

8. Description of Work Accomplished
(If more space is required, attach additional sheets. Identify with aircraft nationality and registration mark and date work completed.)

Installed Vortex Generators on the wings and vertical stabilizer and Strakes on the Engine Nacelles and 5% Take Off Gross Weight increase, in accordance with Drawing List DL-340 Rev. C, and Installation Manual, P/N C-340, Inserted FAA Approved Airplane Flight Manual Supplement into the AFM, in accordance with Micro AeroDynamics Installation Manual P/N C-340, Rev A, dated May 7, 1991, and January 25, 1991, respectively, or later FAA Approved revision, per STC #SA4934NM. Option #2

Negligible weight change

END

☐ Additional Sheets Are Attached

A MEMORANDUM TO FILE FOLDER HAS BEEN IMAGED

This aircraft record was sent to imaging without ever having been a microfiche. It went directly to imaging in its paper form. The pages on the registration side of the record are not numbered and family groupings are not identified.

In the imaging system, the registration side will be identified as a single document under the Document Type of ZRL, Converted Registration/Lien, the airworthiness side under ZAW, Converted Airworthiness, and the suspense documents are identified under ZSS.

Documents below this memorandum have been imaged and cannot be moved, removed, or changed.

UNITED STATES OF AMERICA

DEPARTMENT OF TRANSPORTATION–FEDERAL AVIATION ADMINISTRATION

STANDARD AIRWORTHINESS CERTIFICATE

1. NATIONALITY AND REGISTRATION MARKS	2. MANUFACTURER AND MODEL	3. AIRCRAFT SERIAL NUMBER	4. CATEGORY
N98624	Cessna 340A	340A0064	Normal

5. AUTHORITY AND BASIS FOR ISSUANCE

This airworthiness certificate is issued pursuant to the Federal Aviation Act of 1958 and certifies that, as of the date of issuance, the aircraft to which issued has been inspected and found to conform to the type certificate therefor, to be in condition for safe operation, and has been shown to meet the requirements of the applicable comprehensive and detailed airworthiness code as provided by Annex 8 to the Convention on International Civil Aviation, except as noted herein.

Exceptions: 1435: Aft position light vertical angle coverage (CAR 3.701 (c))

6. TERMS AND CONDITIONS

Unless sooner surrendered, suspended, revoked, or a termination date is otherwise established by the Administrator, this airworthiness certificate is effective for long as the maintenance, preventative maintenance, and alterations are performed in accordance with Parts 21, 43, and 91 of the Federal Aviation Regulations, as appropriate, and the aircraft is registered in the United States.

DATE OF ISSUANCE	FAA REPRESENTATIVE	DESIGNATION NUMBER
5-21-76	Delegation Option-Manufacturer, CE-3 By	DOA CE-3

Any alteration, reproduction, or misuse of this Certificate is punishable by a fine not exceeding $1,000, or imprisonment not exceeding 3 years, or both. THIS CERTIFICATE MUST BE DISPLAYED IN THE AIRCRAFT IN ACCORDANCE WITH APPLICABLE FEDERAL AVIATION REGULATIONS.

Form Approved
Budget Bureau No. 04-R0058

DEPARTMENT OF TRANSPORTATION
FEDERAL AVIATION ADMINISTRATION

APPLICATION FOR AIRWORTHINESS CERTIFICATE

INSTRUCTIONS—Print or type. Do not write in shaded areas; these are for FAA use only. Submit original only to an authorized FAA Representative. If additional space is required, use an attachment. For special flight permits complete Sections II and VI or VII as applicable.

I. AIRCRAFT DESCRIPTION

1. REGISTRATION MARK	2. AIRCRAFT BUILDER'S NAME (make)	3. AIRCRAFT MODEL DESIGNATION	4. YR. MFG.	FAA CODING
N98624	Cessna	340A	1976	2076405
5. AIRCRAFT SERIAL NO.	**6. ENGINE BUILDER'S NAME (make)**	**7. ENGINE MODEL DESIGNATION**		17040
340A0064	Continental	TSIO-520-N		
8. NUMBER OF ENGINES	**9. PROPELLER BUILDER'S NAME (make)**	**10. PROPELLER MODEL DESIGNATION**		**11. AIRCRAFT IS:**
Two	McCauley	3AF32C93/82NC-5.5		IMPORT

II. CERTIFICATION REQUESTED

APPLICATION IS HEREBY MADE FOR: *(Check applicable items)*

A	1	X	STANDARD AIRWORTHINESS CERT. *(Indicate category)*	X	NORMAL		UTILITY		ACROBATIC		TRANSPORT		GLIDER		BALLOON	
B			SPECIAL AIRWORTHINESS CERTIFICATE *(Check appropriate items)*													
	2		LIMITED													
	5		PROVISIONAL *(Indicate class)*	1		CLASS I										
				2		CLASS II										
	3		RESTRICTED *(Indicate operation(s) to be conducted)*	1		AGRICULTURE & PEST CONTROL		2		AERIAL SURVEYING		3		AERIAL ADVERTISING		
				4		FOREST *(Wild life conservation)*		5		PATROLLING		6		WEATHER CONTROL		
				0		OTHER *(Specify)*										
	4		EXPERIMENTAL *(Indicate operation(s) to be conducted)*	1		RESEARCH AND DEVELOPMENT		2		AMATEUR BUILT		3		EXHIBITION		
				4		RACING		5		CREW TRAINING		6		MKT. SURVEY		
				0		TO SHOW COMPLIANCE WITH FAR										
	8		SPECIAL FLIGHT PERMIT *(Indicate operation to be conducted then complete Section VI or VII as applicable on reverse side)*	1		FERRY FLIGHT FOR REPAIRS, ALTERATIONS, MAINTENANCE OR STORAGE										
				2		EVACUATE FROM AREA OF IMPENDING DANGER										
				3		OPERATION IN EXCESS OF MAX. CERTIFICATED TAKE-OFF WEIGHT										
				4		DELIVERING OR EXPORT		5		PRODUCTION FLIGHT TESTING						
C	6		MULTIPLE AIRWORTHINESS CERTIFICATE *(Check appropriate Restricted Operation and Standard or Limited as applicable above)*													

III. OWNER'S CERTIFICATION

A. REGISTERED OWNER *(As shown on Certificate of Aircraft Registration)* — IF DEALER, CHECK HERE → X

NAME	ADDRESS
Cessna Aircraft Company	West K-42 Highway, P. O. Box 1977 Wichita, Kansas 67201

B. AIRCRAFT CERTIFICATION BASIS *(Check applicable blocks and complete items as indicated)*

X	AIRCRAFT SPECIFICATION OR TYPE CERTIFICATION DATA SHEET *(Give No. and Revision No.)* 3A25 Rev. 11	X	AIRWORTHINESS DIRECTIVES *(Check if all applicable AD's complied with and give latest AD No.)* Issue 76-08-06
	AIRCRAFT LISTING *(Give page No(s).)* NA		SUPPLEMENTAL TYPE CERTIFICATE *(List number of each STC incorporated)* NA

C. AIRCRAFT OPERATION AND MAINTENANCE RECORDS

X	CHECK IF RECORDS IN COMPLIANCE WITH FAR 91.173	TOTAL AIRFRAME HOURS— 3.5	3	EXPERIMENTAL ONLY—*Enter hours flown since last certificate issued or renewed* NA

D. CERTIFICATION—I hereby certify that I am the owner (or his agent) of the aircraft described above; that the aircraft is registered with the Federal Aviation Administration in accordance with Section 501 of the Federal Aviation Act of 1958, and applicable Federal Aviation Regulations; and that the aircraft has been inspected and is airworthy and eligible for the airworthiness certificate requested.

DATE OF APPLICATION	NAME AND TITLE *(Print or type)*	SIGNATURE
	A. D. Schmidt, Quality Control Manager	A D Schmidt

IV. INSPECTION AGENCY VERIFICATION

A. THE AIRCRAFT DESCRIBED ABOVE HAS BEEN INSPECTED AND FOUND AIRWORTHY BY: *(Complete this section only if FAR 21.183 (d) applies)*

2		FAR PART 121 OR 127 CERTIFICATE HOLDER *(Give Certificate No.)*	3		CERTIFICATED MECHANIC *(Give Certificate No.)*	6		CERTIFICATED REPAIR STATION *(Give Certificate No.)*
5		AIRCRAFT MANUFACTURER *(Give Name of Firm)*					

DATE	TITLE	SIGNATURE

FAA REPRESENTATIVE CERTIFICATION

(Check ALL applicable blocks) I find that the aircraft described in Section I or VII meets the requirements for: [X] The certification requested, or [X] Amendment or modification of its current airworthiness certificate. Inspection for a special flight permit under Section VII was conducted by: [ ] FAA Inspector; certificate holder under [ ] FAR 65, [ ] FAR 121 or 127, or [ ] FAR 145.

DATE	DISTRICT OFFICE		DESIGNEE'S SIGNATURE AND NO.		FAA INSPECTOR'S SIGNATURE
5-21-76	CE EMDO 3-0-43	4	Executive Engineer Cessna Aircraft Co., Wallace Div. Delegation Option Manufacturer, CE-3 By Raymond M Rawden Raymond M. Rawden	1	

FAA Form 8130-6 (7-70)

VI. PRODUCTION FLIGHT TESTING

A. MANUFACTURER

NAME	ADDRESS

B. PRODUCTION BASIS *(Check applicable item)*

- [ ] PRODUCTION CERTIFICATE *(Give production certificate number)*
- [ ] TYPE CERTIFICATE ONLY
- [ ] APPROVED PRODUCTION INSPECTION SYSTEM

C. GIVE QUANTITY OF CERTIFICATES REQUIRED FOR OPERATING NEEDS:

DATE OF APPLICATION	NAME AND TITLE *(Print or type)*	SIGNATURE

VII. SPECIAL FLIGHT PERMIT PURPOSES OTHER THAN PRODUCTION FLIGHT TEST

A. DESCRIPTION OF AIRCRAFT

REGISTERED OWNER	ADDRESS
BUILDER *(Make)*	MODEL
SERIAL NUMBER	REGISTRATION MARK

B. DESCRIPTION OF FLIGHT

FROM	TO	
VIA	DEPARTURE DATE	DURATION

C. CREW REQUIRED TO OPERATE THE AIRCRAFT AND ITS EQUIPMENT

- [ ] PILOT
- [ ] CO-PILOT
- [ ] NAVIGATOR
- [ ] OTHER *(Specify)*

D. THE AIRCRAFT DOES NOT MEET THE APPLICABLE AIRWORTHINESS REQUIREMENTS AS FOLLOWS:

E. THE FOLLOWING RESTRICTIONS ARE CONSIDERED NECESSARY FOR SAFE OPERATION *(Use attachment if necessary)*

F. CERTIFICATION—I hereby certify that I am the registered owner (or his agent) of the aircraft described above; that the aircraft is registered with the Federal Aviation Administration in accordance with Section 501 of the Federal Aviation Act of 1958, and applicable Federal Aviation Regulations; and that the aircraft has been inspected and is airworthy for the flight described.

DATE	NAME AND TITLE *(Print or type)*	SIGNATURE

VIII. AIRWORTHINESS DOCUMENTATION (FAA use only)

X	A. Operating Limitations and Markings in Compliance with FAR 91.31 as Applicable		G. Statement of Conformity, FAA Form 317 *(Attach when required)*
	B. Current Operating Limitations Attached		H. Foreign Airworthiness Certification for Import Aircraft *(Attach when required)*
	C. Data, Drawings, Photographs, etc. *(Attach when required)*		I. Previous Airworthiness Certificate Issued in Accordance with FAR _____ CAR _____ *(Original attached)*
X	D. Current Weight and Balance Information Available in Aircraft		
	E. Major Repair and Alteration, FAA 337 *(Attach when required)*	X	J. Current Airworthiness Certificate Issued in Accordance with FAR 21.183a per 21.273 *(Copy attached)*
X	F. This Inspection Recorded in Aircraft Records		

DEPARTMENT OF TRANSPORTATION
FEDERAL AVIATION ADMINISTRATION

MAJOR REPAIR AND ALTERATION
(Airframe, Powerplant, Propeller, or Appliance)

Form Approved
Budget Bureau No. 04-R060.1

FOR FAA USE ONLY

OFFICE IDENTIFICATION

INSTRUCTIONS: Print or type all entries. See FAR 43.9, FAR 43 Appendix B, and AC 43.9-1 (or subsequent revision thereof) for instructions and disposition of this form.

1. AIRCRAFT	MAKE: Cessna	MODEL: 340A
	SERIAL NO.: 340A-0064	NATIONALITY AND REGISTRATION MARK: N98624
2. OWNER	NAME *(As shown on registration certificate)*: Fontana Aviation, Inc.	ADDRESS *(As shown on registration certificate)*: Ford Airport Iron Mountain, Michigan 49801

3. FOR FAA USE ONLY

4. UNIT IDENTIFICATION				5. TYPE	
UNIT	MAKE	MODEL	SERIAL NO.	REPAIR	ALTERATION
AIRFRAME	*(As described in item 1 above)*				X
POWERPLANT					
PROPELLER					
APPLIANCE	TYPE MANUFACTURER				

6. CONFORMITY STATEMENT

A. AGENCY'S NAME AND ADDRESS	B. KIND OF AGENCY	C. CERTIFICATE NO.
Fontana Aviation, Inc. Ford Airport Iron Mountain, Michigan 49801	U.S. CERTIFICATED MECHANIC FOREIGN CERTIFICATED MECHANIC X CERTIFICATED REPAIR STATION MANUFACTURER	3202

D. I certify that the repair and/or alteration made to the unit(s) identified in item 4 above and described on the reverse or attachments hereto have been made in accordance with the requirements of Part 43 of the U.S. Federal Aviation Regulations and that the information furnished herein is true and correct to the best of my knowledge.

DATE	SIGNATURE OF AUTHORIZED INDIVIDUAL
August 12, 1976	John R. Waisanen

7. APPROVAL FOR RETURN TO SERVICE

Pursuant to the authority given persons specified below, the unit identified in item 4 was inspected in the manner prescribed by the Administrator of the Federal Aviation Administration and is [X] APPROVED [ ] REJECTED

BY							
		FAA FLT. STANDARDS INSPECTOR		MANUFACTURER		INSPECTION AUTHORIZATION	OTHER *(Specify)*
		FAA DESIGNEE	X	REPAIR STATION		CANADIAN DEPARTMENT OF TRANSPORT INSPECTOR OF AIRCRAFT	

DATE OF APPROVAL OR REJECTION	CERTIFICATE OR DESIGNATION NO.	SIGNATURE OF AUTHORIZED INDIVIDUAL
August 12, 1976	3202	John R. Waisanen

AUG 19 1976

FAA Form 337 (7-67) (8320)

NOTICE

Weight and balance or operating limitation changes shall be entered in the appropriate aircraft record. An alteration must be compatible with all previous alterations to assure continued conformity with the applicable airworthiness requirements.

8. DESCRIPTION OF WORK ACCOMPLISHED *(If more space is required, attach additional sheets. Identify with aircraft nationality and registration mark and date work completed.)*

Installed King KN-74 with a Bendix IN 831 and King KNR-600A Mod status #2 per King Installation Manual 006-0056-00 and Maintenance Manual 006-5047-03.

New Weight and Balance, including new useful load, computed and log book endorsed accordingly.

Equipment list modified to reflect currently installed equipment.

Electrical load does not exceed 80% of alternator capacity.

Area Nav System calibrated per King Maintenance and overhaul manual 006-0089-00.

Bench and ramp checks were conducted per King Manual 006-0089-00 and all accuracy requirements have been met.

Approval BAsis: FAA Advisory Circular 90-45, Appendix B, Paragraph 2, FAA AC 43.13.1 and FAA AC 43.13.2.

A flight test was conducted and the errors observed, as shown on attached sheet, were well within the error tables inFAA Advosory Circular 90-45, App. A, Pages 9, 10, 11 and data recorded and filed at CRS No. 3202. System approved IFR enroute and approach.

END

☐ ADDITIONAL SHEETS ARE ATTACHED

★1975-G.P.O.-1703-M/673-200/175

Test Course	Actual reading during test flight
Leave IMT on 304 radial distance set at 26.9 NM	
1. Check point Stambaugh 304° DME) NM	1. on course DME reading 0 NM
2. Check point fire tower 183° DME 16.9 NM	2. on course DME reading 16.9 NM
3. Check point Laona Mill DME 0 NM	3. on course DME reading .1 NM
4. Check point IMT Vortac 055° DME 0 NM	4. on course DME reading 0 NM

DEPARTMENT OF TRANSPORTATION
FEDERAL AVIATION ADMINISTRATION

MAJOR REPAIR AND ALTERATION
(Airframe, Powerplant, Propeller, or Appliance)

Form Approved
Budget Bureau No. 04-R060.1

FOR FAA USE ONLY
OFFICE IDENTIFICATION

INSTRUCTIONS: Print or type all entries. See FAR 43.9, FAR 43 Appendix B, and AC 43.9-1 (or subsequent revision thereof) for instructions and disposition of this form.

1. AIRCRAFT	MAKE: Cessna	MODEL: 340A
	SERIAL NO.: 340A-0064	NATIONALITY AND REGISTRATION MARK: N98624
2. OWNER	NAME *(As shown on registration certificate)*: Fontana Aviation, Inc.	ADDRESS *(As shown on registration certificate)*: Ford Airport, Iron Mountain, MI 49801

3. FOR FAA USE ONLY

4. UNIT IDENTIFICATION / 5. TYPE

UNIT	MAKE	MODEL	SERIAL NO.	5. TYPE: REPAIR	5. TYPE: ALTERATION
AIRFRAME	*(As described in item 1 above)*				X
POWERPLANT					
PROPELLER					
APPLIANCE	TYPE / MANUFACTURER				

6. CONFORMITY STATEMENT

A. AGENCY'S NAME AND ADDRESS	B. KIND OF AGENCY	C. CERTIFICATE NO.
Fontana Aviation, Inc. Ford Airport Iron Mountain, MI 49801	U.S. CERTIFICATED MECHANIC FOREIGN CERTIFICATED MECHANIC X CERTIFICATED REPAIR STATION MANUFACTURER	CRS 3202

D. I certify that the repair and/or alteration made to the unit(s) identified in item 4 above and described on the reverse or attachments hereto have been made in accordance with the requirements of Part 43 of the U.S. Federal Aviation Regulations and that the information furnished herein is true and correct to the best of my knowledge.

DATE	SIGNATURE OF AUTHORIZED INDIVIDUAL
August 12, 1976	Fredrick J. Ashwood

7. APPROVAL FOR RETURN TO SERVICE

Pursuant to the authority given persons specified below, the unit identified in item 4 was inspected in the manner prescribed by the Administrator of the Federal Aviation Administration and is [X] APPROVED [ ] REJECTED

BY							OTHER *(Specify)*
		FAA FLT. STANDARDS INSPECTOR		MANUFACTURER		INSPECTION AUTHORIZATION	
		FAA DESIGNEE	X	REPAIR STATION		CANADIAN DEPARTMENT OF TRANSPORT INSPECTOR OF AIRCRAFT	

DATE OF APPROVAL OR REJECTION	CERTIFICATE OR DESIGNATION NO.	SIGNATURE OF AUTHORIZED INDIVIDUAL
August 12, 1976	3202	Fredrick J. Ashwood

AUG 19 1976

FAA Form 337 (7-67) (8320)

NOTICE

Weight and balance or operating limitation changes shall be entered in the appropriate aircraft record. An alteration must be compatible with all previous alterations to assure continued conformity with the applicable airworthiness requirements.

8. DESCRIPTION OF WORK ACCOMPLISHED *(If more space is required, attach additional sheets. Identify with aircraft nationality and registration mark and date work completed.)*

Installed Bendix Altimeter/Encoder Type 3252013 with King KT-76. 3252013 installed per Bendix Pub. #4928J, KT-76 installed per manual 006-0067-01. 3252013 conformance specifications meet Altimeter TSO-C10b and Encoder TSO-C88. King KT-76 conformance specifications to TSO-C74c.

New Weight and Balance, including new Useful Load, computed and log book endorsed accordingly.

Equipment list modified to reflect currently installed equipment.

Altitude reporting system test for compliance with FAR 91.36(b) per Par. 6A, 7A and 7b of Advisory Circular 43-6. Equipment used for test:
IFR ATC-1200 Xpndr/DME Test Set
Tektronix Type 453 Oscilloscope
Barfield 1811 F-D

King KT-76 checked to comply with FAR 91.177.

Altitude reporting system checked to an altitude of 35,000 feet.

END

☐ ADDITIONAL SHEETS ARE ATTACHED

★1975-G.P.O.-1703-M/673-200/175

DEPARTMENT OF TRANSPORTATION
FEDERAL AVIATION ADMINISTRATION

MAJOR REPAIR AND ALTERATION
(Airframe, Powerplant, Propeller, or Appliance)

Form Approved
Budget Bureau No. 04-R060.1

FOR FAA USE ONLY

OFFICE IDENTIFICATION

INSTRUCTIONS: Print or type all entries. See FAR 43.9, FAR 43 Appendix B, and AC 43.9-1 (or subsequent revision thereof) for instructions and disposition of this form.

1. AIRCRAFT	MAKE: Cessna	MODEL: 340A
	SERIAL NO.: 340A-0064	NATIONALITY AND REGISTRATION MARK: N98624
2. OWNER	NAME *(As shown on registration certificate)*: Fontana Aviation, Inc.	ADDRESS *(As shown on registration certificate)*: Ford Airport Iron Mountain, Michigan 49801

3. FOR FAA USE ONLY

4. UNIT IDENTIFICATION / 5. TYPE

UNIT	MAKE	MODEL	SERIAL NO.	5. TYPE: REPAIR	5. TYPE: ALTERATION
AIRFRAME	◆◆◆◆◆◆◆◆◆◆◆◆◆◆◆◆◆◆◆◆ *(As described in item 1 above)* ◆◆◆◆◆◆◆◆◆◆◆◆◆◆◆◆◆◆◆◆				X
POWERPLANT					
PROPELLER					
APPLIANCE	TYPE				
	MANUFACTURER				

6. CONFORMITY STATEMENT

A. AGENCY'S NAME AND ADDRESS	B. KIND OF AGENCY		C. CERTIFICATE NO.
Fontana Aviation, Inc. Ford Airport Iron Mountain, MI 49801		U.S. CERTIFICATED MECHANIC	CRS 3202
		FOREIGN CERTIFICATED MECHANIC	
	X	CERTIFICATED REPAIR STATION	
		MANUFACTURER	

D. I certify that the repair and/or alteration made to the unit(s) identified in item 4 above and described on the reverse or attachments hereto have been made in accordance with the requirements of Part 43 of the U.S. Federal Aviation Regulations and that the information furnished herein is true and correct to the best of my knowledge.

DATE	SIGNATURE OF AUTHORIZED INDIVIDUAL
August 12, 1976	John R. Waisanen

7. APPROVAL FOR RETURN TO SERVICE

Pursuant to the authority given persons specified below, the unit identified in item 4 was inspected in the manner prescribed by the Administrator of the Federal Aviation Administration and is [X] APPROVED [ ] REJECTED

BY							OTHER *(Specify)*
		FAA FLT. STANDARDS INSPECTOR		MANUFACTURER		INSPECTION AUTHORIZATION	
		FAA DESIGNEE	X	REPAIR STATION		CANADIAN DEPARTMENT OF TRANSPORT INSPECTOR OF AIRCRAFT	

DATE OF APPROVAL OR REJECTION	CERTIFICATE OR DESIGNATION NO.	SIGNATURE OF AUTHORIZED INDIVIDUAL
August 12, 1976	3202	John R. Waisanen

AUG 19 1976

FAA Form 337 (7-67) (8320)

NOTICE

Weight and balance or operating limitation changes shall be entered in the appropriate aircraft record. An alteration must be compatible with all previous alterations to assure continued conformity with the applicable airworthiness requirements.

8. DESCRIPTION OF WORK ACCOMPLISHED *(If more space is required, attach additional sheets. Identify with aircraft nationality and registration mark and date work completed.)*

Installed Bendix FCS-810 Flight Control System per STC #SA50250 and manufacturers installation instructions.

END

☐ ADDITIONAL SHEETS ARE ATTACHED

★1975-G.P.O.-1703-M/673-200/175