US Department of Transportation
Federal Aviation Administration

MAJOR REPAIR AND ALTERATION
(Airframe, Powerplant, Propeller, or Appliance)

OMB No. 2120-0020
Exp: 5/31/2018

Electronic Tracking Number

For FAA Use Only

INSTRUCTIONS: Print or type all entries. See Title 14 CFR §43.9, Part 43 Appendix B, and AC 43.9-1 (or subsequent revision thereof) for instructions and disposition of this form. This report is required by law (49 U.S.C. §44701). Failure to report can result in a civil penalty for each such violation. (49 U.S.C. §46301(a))

1. Aircraft	Nationality and Registration Mark: N953MA	Serial No.: 3372	
	Make: Mooney	Model: M20C	Series:
2. Owner	Name *(As shown on registration certificate)*: Aeromax USA LLC	Address *(As shown on registration certificate)*: Address 1815 Airport Loop; City Kerrville; State TX; Zip 78028-9696; Country USA	

3. For FAA Use Only

4. Type		5. Unit Identification			
Repair	Alteration	Unit	Make	Model	Serial No.
[X]	[ ]	AIRFRAME	Mooney	*(As described in Item 1 above)*	3372
[ ]	[ ]	POWERPLANT			
[ ]	[ ]	PROPELLER			
[ ]	[ ]	APPLIANCE	Type / Manufacturer		

6. Conformity Statement

A. Agency's Name and Address	B. Kind of Agency		
Name: Dugosh Aviation LLC	[X] U. S. Certificated Mechanic	[ ] Manufacturer	
Address: 1875 Airport Loop Suite 105	[ ] Foreign Certificated Mechanic	C. Certificate No.	
City: Kerrville State: TX	[ ] Certificated Repair Station	2804926	
Zip: 78028 Country: USA	[ ] Certificated Maintenance Organization		

D. I certify that the repair and/or alteration made to the unit(s) identified in item 5 above and described on the reverse or attachments hereto have been made in accordance with the requirements of Part 43 of the U.S. Federal Aviation Regulations and that the information furnished herein is true and correct to the best of my knowledge.

Extended range fuel per 14 CFR Part 43 App. B [ ]

Signature/Date of Authorized Individual: DAVid Behrens David Behrens

7. Approval for Return to Service

Pursuant to the authority given persons specified below, the unit identified in item 5 was inspected in the manner prescribed by the Administrator of the Federal Aviation Administration and is [X] Approved [ ] Rejected

BY							
	[ ]	FAA Flt. Standards Inspector	[ ]	Manufacturer	[ ]	Maintenance Organization	[ ] Persons Approved by Canadian Department of Transport
	[ ]	FAA Designee	[ ]	Repair Station	[X]	Inspection Authorization	Other *(Specify)*

Certificate or Designation No.: 2804926

Signature/Date of Authorized Individual: DAVid Behrens David Behrens

FAA Form 337 (10/06)

NOTICE

Weight and balance or operating limitation changes shall be entered in the appropriate aircraft record. An alteration must be compatible with all previous alterations to assure continued conformity with the applicable airworthiness requirements.

8. Description of Work Accomplished
(If more space is required, attach additional sheets. Identify with aircraft nationality and registration mark and date work completed.)

N953MA	September 06, 2019
Nationality and Registration Mark	Date

I. Installed new right hand wing skin P/N 220000-144 at wing STA 147.75 and 103.50. All work done per Mooney Service & Maintenance Manual for M20C and AC 43.13-/B Chapter 4 Section 4 Par 4-57. No weight change.

----------THE END----------

☐ Additional Sheets Are Attached

FAA Form 337 (10/06)

US Department of Transportation
Federal Aviation Administration

MAJOR REPAIR AND ALTERATION
(Airframe, Powerplant, Propeller, or Appliance)

Form Approved OMB No. 2120-0020 2/28/2011

Electronic Tracking Number **2016000760**

For FAA Use Only

Electronically Submitted 337

INSTRUCTIONS: Print or type all entries. See Title 14 CFR §43.9, Part 43 Appendix B, and AC 43.9-1 (or subsequent revision thereof) for instructions and disposition of this form. This report is required by law (49 U.S.C. §44701). Failure to report can result in a civil penalty for each such violation. (49 U.S.C. §46301(a))

1. Aircraft	Nationality and Registration Mark **N** 953MA	Serial No. 3372	
	Make MOONEY	Model M20C	Series NA
2. Owner	Name *(As shown on registration certificate)* SURGICARE LLC	Address *(As shown on registration certificate)* Address 908 YUCCA ST City T OR C State NM Zip 879011569 Country UNITED STATES	

3. For FAA Use Only

Inspector Signature _____

Designee Signature _____ Authorization Number _____

4. Type		5. Unit Identification			
Repair	Alteration	Unit	Make	Model	Serial No.
☐	☒	AIRFRAME	—	*(As described in Item 1 above)*	—
☐	☐	POWERPLANT			
☐	☐	PROPELLER			
☐	☐	APPLIANCE	Type Manufacturer		

6. Conformity Statement

A. Agency's Name and Address	B. Kind of Agency	
Name Jonathan Reiners	☒ U. S. Certificated Mechanic	☐ Manufacturer
Address 105 Comerciantes Blvd. 119	☐ Foreign Certificated Mechanic	C. Certificate No.
City Santa Teresa State NM	☐ Certificated Repair Station	2009566
Zip 88008 Country UNITED STATES	☐ Certificated Maintenance Organization	

D. I certify that the repair and/or alteration made to the unit(s) identified in item 5 above and described on the reverse or attachments hereto have been made in accordance with the requirements of Part 43 of the U.S. Federal Aviation Regulations and that the information furnished herein is true and correct to the best of my knowledge.

Extended range fuel per 14 CFR Part 43 App. B ☐

Signature/Date of Authorized Individual

Jonathan Reiners

Digitally signed by Jonathan Reiners
DN: c=US, o=FAA, cn=Jonathan Reiners, email=jonreiners@gmail.com
Date: 2016.11.30 06:11:31 -07'00'

7. Approval for Return to Service

Pursuant to the authority given persons specified below, the unit identified in item 5 was inspected in the manner prescribed by the Administrator of the Federal Aviation Administration and is ☒ Approved ☐ Rejected

BY								
		FAA Flt. Standards Inspector		Manufacturer		Maintenance Organization		Persons Approved by Canadian Department of Transport
		FAA Designee		Repair Station	☒	Inspection Authorization		Other *(Specify)*

Certificate or Designation No. 2009566

Signature/Date of Authorized Individual

Jonathan Reiners

Digitally signed by Jonathan Reiners
DN: c=US, o=FAA, cn=Jonathan Reiners, email=jonreiners@gmail.com
Date: 2016.11.30 06:16:17 -07'00'

NOTICE

Weight and balance or operating limitation changes shall be entered in the appropriate aircraft record. An alteration must be compatible with all previous alterations to assure continued conformity with the applicable airworthiness requirements.

8. Description of Work Accomplished
(If more space is required, attach additional sheets. Identify with aircraft nationality and registration mark and date work completed.)

N953MA	11/30/2016
Nationality and Registration Mark	Date

T.T4609.9
install STC SA4402NM Lasar one piece Windshield , Installation of single piece windshield in accordance with FAA sealed Lake Aero Styling and Repair Drawing List Report No. 120
********** END **********

☐ Additional Sheets Are Attached

LASAR SPEED MODIFICATIONS

FAA APPROVED STC SA4402NM

Issued to LAKE AERO STYLING AND REPAIR

LASAR ONE PIECE WINDSHIELD

LASAR DRAWING LIST REPORT 120

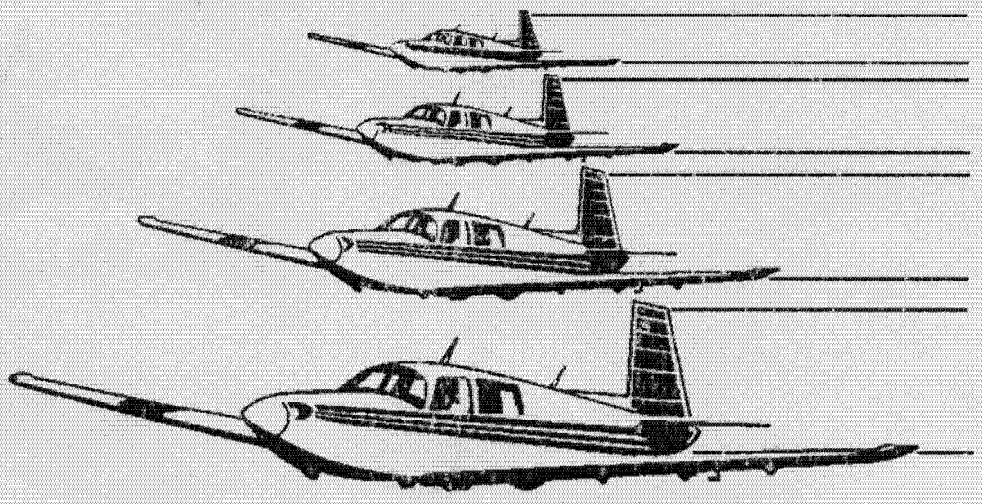

For MOONEY Airplanes including Models: M20,M20A, M20B, M20C, M20D, & M20E

Number of Pages: 1- 14 & ICA 1-3
Initial Issue: November 23, 1981
Revised : February 23, 2010

Manufactured by
LAKE AERO STYLING AND REPAIR
900 F Sky Park Drive Lakeport, California 95453

ONE PIECE WINDSHIELD	Lake Aero Styling & Repair	Revision A
		Sheet i of ii

United States of America
Department of Transportation — Federal Aviation Administration

Supplemental Type Certificate

Number SA4402NM

This certificate issued to Lake Aero Styling and Repair

certifies that the change in the type design for the following product with the limitations and conditions hereto attached hereon meets the airworthiness requirements of Part 3 of the Civil Air Regulations effective Nov. 1, 1949, as amended to May 18, 1954.

Original Product—Type Certificate Number: 2A3
Make: Mooney
Model: M20, M20A, M20B, M20C, M20D, M20E

Description of Type Design Change: Installation of single piece windshield in accordance with FAA sealed Lake Aero Styling and Repair Drawing List Report No. 120, dated November 23, 1981.

Limitations and Conditions: The approval of this change in type design applies to the basic aircraft of the specified models that are otherwise unmodified. This approval should not be extended to other aircraft of these models on which other previously approved modifications are incorporated unless it is determined by the installer that the interrelationship between this change and any of those other previously approved modifications will introduce no adverse effect upon the airworthiness of that aircraft.

This certificate and the supporting data which is the basis for approval shall remain in effect until surrendered, suspended, revoked, or a termination date is otherwise established by the Administrator of the Federal Aviation Administration.

Date of application: November 23, 1981
Date of issuance: FEB 22 1982
Date issued:
Date amended:

By direction of the Administrator
Lyle C. Davis
(Signature)
Acting Chief, Aircraft Modification Section
(Title)

FEDERAL AVIATION ADMINISTRATION

Any alteration of this certificate is punishable by a fine of not exceeding $1,000, or imprisonment not exceeding 3 years, or both.
This certificate may be transferred in accordance with FAR 21.47.

FAA Form 8110-2 (10-68)

LASAR NOTE: KIT # 120 - AUTHORIZATION FOR THE APPLICATION OF THIS MODIFICATION IS GIVEN ONLY FOR USE ON THE SPECIFIC AIRPLANE DESCRIBED AS FOLLOWS:

INSTALLED ON: 1966 M20C **MOONEY N** 953MA **S/N** 3372

Special Notes: SURGICARE LLC

...port, California 95453

ONE PIECE | Lake Aero Styling & | Revision A

GJB

US Department of Transportation
Federal Aviation Administration

MAJOR REPAIR AND ALTERATION
(Airframe, Powerplant, Propeller, or Appliance)

Form Approved
OMB No. 2120-0020

For FAA Use Only

Office Identification
1-500 EA-25-TE3

INSTRUCTIONS: Print or type all entries. See FAR 43.9, FAR 43 Appendix B, and AC 43.9-1 (or subsequent revision thereof) for instructions and disposition of this form. This report is required by law (49 U.S.C. 1421). Failure to report can result in civil penalty not to exceed $1,000 for each such violation (Section 901 Federal Aviation Act of 1958).

1. Aircraft	Make: Mooney	Model: M20C
	Serial No.: 3372	Nationality and Registration Mark: N953MA
2. Owner	Name *(As shown on registration certificate)*: Michael R. Coren	Address *(As shown on registration certificate)*: P.O. Box 338, Central Valley, NY 10917

3. For FAA Use Only

4. Unit Identification / **5. Type**

Unit	Make	Model	Serial No.	Repair	Alteration
AIRFRAME	*(As described in Item 1 above)*				X
POWERPLANT					
PROPELLER					
APPLIANCE	Type / Manufacturer				

6. Conformity Statement

A. Agency's Name and Address	B. Kind of Agency	C. Certificate No.
Jeffrey Edward Saye 36 Wheeler Ave. Warwick, NY 10990	X U.S. Certificated Mechanic Foreign Certificated Mechanic Certificated Repair Station Manufacturer	104566816

D. I certify that the repair and/or alteration made to the unit(s) identified in item 4 above and described on the reverse or attachments hereto have been made in accordance with the requirements of Part 43 of the U.S. Federal Aviation Regulations and that the information furnished herein is true and correct to the best of my knowledge.

Date	Signature of Authorized Individual
June 21, 2005	

7. Approval for Return To Service

Pursuant to the authority given persons specified below, the unit identified in item 4 was inspected in the manner prescribed by the Administrator of the Federal Aviation Administration and is ☒ APPROVED ☐ REJECTED

BY							Other *(Specify)*
		FAA Flt. Standards Inspector		Manufacturer	X	Inspection Authorization	
		FAA Designee		Repair Station		Person Approved by Transport Canada Airworthiness Group	

Date of Approval or Rejection	Certificate or Designation No.	Signature of Authorized Individual
June 21, 2005	1466324	

FAA Form 337 (12-88)

NOTICE

Weight and balance or operating limitation changes shall be entered in the appropriate aircraft record. An alteration must be compatible with all previous alterations to assure continued conformity with the applicable airworthiness requirements.

8. Description of Work Accomplished
(If more space is required, attach additional sheets. Identify with aircraft nationality and registration mark and date work completed.)

Mooney M20C sn: 3372 N953MA Tach:4390.60 TTAF:4390.60 June 21, 2005

1) Installed Whelen HR, CFA self contained Strobe Light Assembly Model HR, CFA and Remote Strobe Light Head Model A470 A R/W using a H 102 Mounting Adapter and Remote Strobe Power Supply Model A490A, TS, CF.

2) This Installation is approved under STC SA615EA and STC SA800EA.

3) STC SA800EA was issued November 14,1968 amended September 08,1999 to Whelen Engineering Co.

4) STC SA615EA was issued May 14,1968 amended June 18,1999 to Whelen Engineering Co.

5) Installation IAW Whelen Engineering Installation and Service Manual dated September 16, 1999 and AC 43.13-1B, Section 1,2,3,&7.

6) HR, CFA self contained Strobe Light Assembly Model HR, CFA System was installed in existing belly rotating beacon attach point and wired utilizing existing wiring, switch and circuit breaker. Wiring size conforms to Electrical Wire size Chart in AC 43.13-1B Chapter 11 section 5, figure 11.7 and 11.7A.

7) A470A,R/W Strobe Light Assembly System was installed at F.S. 126.0 and Power Supply Installed at F.S. 134.0 and wired utilizing Whelen Install Kit Wiring HS-5, utilizing existing switch and circuit breaker. Wiring size conforms to Electrical Wire size Chart in AC 43.13-1B Chapter 11 section 5, figure 11.7 and 11.7A and AC 43.13-2 Chapter 4, Paragraph 52(a).

8) EMI check performed in accordance with AC 25-10 paragraphs 5(f) and 5(n). AC 43.13-1B Chapter 11 section 8 paragraphs 11-106 and 11-107, and AC 43.13.2A Chapter 4, paragraph 52 through 54, Interference Test.

9) Weight and Balance and Equipment List Revised.

10) Log Book Entry Reflects this installation.

11) Instructions for Continued Airworthiness will be found in the installed manufacturer's maintenance manual and incorporated into the current aircraft inspection program, Oyherwise the Scope and Details of FAR 43, Appendix D will apply.

x Additional Sheets Are Attached

United States Of America

Department of Transportation - Federal Aviation Administration

Supplemental Type Certificate

Number SA615EA

This Certificate issued to Whelen Engineering Company, Inc.
Route 145, Winthrop Road
Chester, Connecticut 06412-0684

certifies that the change in the type design for the following product with the limitations and conditions therefor as specified hereon meets the airworthiness requirements of Part 3, 6, 23, 27 *of the* Civil Air/Federal Aviation *Regulations.*

Original Product Type Certificate Number: See Attached Eligibility List dated June 18, 1999

Make:

Model:

Description of Type Design Change:

Installation of Whelen Anti-Collision Strobe Light System, Models HD, HR, HR-CF-A, or HS (-14(14V) or –28(28(V)), as replacement for originally installed anti-collision lights, when installed in accordance with Whelen Installation and Service Manual dated January 1, 1985, or later FAA-approved revisions.

Limitations and Conditions:

1. These lights comply with the anti-collision light standards of the FARs as follows:

   a. With the red or combined red/white lens; those effective on or prior to August 10, 1971.
   b. With the white lens; those effective on August 11, 1971.

(See continuation sheet 2 of 6)

The STC holder will provide each person it permits to use this certificate to alter the product written evidence of the agreement in a form acceptable to the Administrator.

This certificate and the supporting data which is the basis for approval shall remain in effect until surrendered, suspended, revoked or a termination date is otherwise established by the Administrator of the Federal Aviation Administration.

Date of application: February 19, 1968

Date reissued:

Date of issuance: May 14, 1968

Date amended: June 18, 1999

See page 2 for amendment history.

By direction of the Administrator

(Signature)

Ronald L. Vavruska
Manager
Boston Aircraft Certification Office

(Title)

Any alteration of this certificate is punishable by a fine of not exceeding $1,000, or imprisonment not exceeding 3 years, or both.

This certificate may be transferred in accordance with FAR 21.47.

CONTINUED PAGE 2.

Limitations and Conditions (Cont'd):

2. Install the following placard Whelen Part No. A421, or other FAA approved equivalent:

   "WARNING TO AVOID OPTICAL ILLUSION AND SEVERE VERTIGO, TURN ANTI-COLLISION LIGHTS OFF UPON ENTERING CLOUDS, FOG OR HAZE."

3. Minimum required operating voltage is 13.2 volts for 14 volt systems.
   Minimum required operating voltage is 26.4 volts for 28 volt systems.

4. The aircraft listed on the eligibility list are those which have had both the physical installation of the lights substantiated and the field of coverage checked including the 20" mask. Aircraft not included in the list can use these lights when the physical installation and field of coverage is substantiated as indicated in; Whelen's Installation and Service Manual for Whelen Aviation Anti-Collision Strobe Light Systems dated November 7, 1972, in the portion entitled "Aircraft Not Specifically Mentioned on the Eligibility List".

5. HD or HD, power ;supplies may be used in; place of an HS or HD power supply respectively in order to also provide power for other Whelen strobe lights installed in accordance with STC SA800EA. The preceding is a statement of compatibility of power supplies only. Refer to STC SA800EA for installation of the other Whelen Strobe Lights acceptable in combination with this STC.

6. The approval of this change in type design applies basically to aircraft listed on the attached eligibility list. This approval should not be extended to other aircraft of these models on which other previously approved modifications are incorporated unless it is redetermined by the installer that the interrelationship between this change and any of those other previously approved modifications will introduce no adverse effect upon the airworthiness of the aircraft. This determination should include a night flight check as specified in AC 43.13-2, Chapter 4, Paragraph 42a.

NOTE: Aircraft whose application for type certificate was made before April 1. 1957, may, but need not, comply with the field of coverage requirements of FAR 23 (27).1401(b). Compliance with Far 91.33(c) may not be shown provided the light installation is in accordance with data approved prior to August 11, 1971, and applicable criteria of Advisory Circular 43.13-2 are met.

United States Of America
Department of Transportation - Federal Aviation Administration

Supplemental Type Certificate

Number SA800EA

This Certificate issued to Whelen Engineering Company, Inc.
Route 145, Winthrop Road
Chester, Connecticut 06412-0684

certifies that the change in the type design for the following product with the limitations and conditions therefor as specified hereon meets the airworthiness requirements of Part 3, 6, 23, 27 *of the* Civil Air/Federal Aviation *Regulations.*

Original Product Type Certificate Number : See Attached Eligibility List dated September 8, 1999

Make :

Model :

Description of Type Design Change:

Installation of Aviation White Anti-Collision Strobe Lights Whelen Models A429, A430, A434, A450, A470-R/W (Red/White), A470A-R/W (Red/ White), A500, A625, or A650 and associated power supplies or Model SA Strobe Light System in accordance with Whelen Installation and Service Manual dated January 1, 1985, or later FAA-approved revisions.

Limitations and Conditions:

1. The Aviation White Anti-Collision Lights listed under Description of Type Design Change meet the requirements of FAR 23 and the similarly numbered sections of FAR 27 as follows:

   a. 23.1397(c), 23.1401(c), (d), (e), effective August 11, 1971;
   b. 23.1401(f) in effect on August 10, 1971 (See STC Continuation Sheet)

(See continuation sheet 2 of 8)

The STC holder will provide each person it permits to use this certificate to alter the product written evidence of the agreement in a form acceptable to the Administrator.

This certificate and the supporting data which is the basis for approval shall remain in effect until surrendered, suspended, revoked or a termination date is otherwise established by the Administrator of the

Date of application : May 2, 1969

Date reissued :

Date of issuance : November 14, 1969

Date amended : September 8, 1999

Federal Aviation Administration

See page 3 for amendment history.

By direction of the Administrator

(Signature)

Ronald L. Vavruska
Manager
Boston Aircraft Certification Office

(Title)

Any alteration of this certificate is punishable by a fine of not exceeding $1,000, or imprisonment not exceeding 3 years, or both.

FAA Form 8110-2(10-68) Page 1 of 8 This certificate may be transferred in accordance with FAR 21.47.

CONTINUED PAGE 2 AND 3.

c. A408W and 470W with power supplies approved under STC SA615EA meet FAR 23.1401 (f) effective August 11, 1971.

d. A650 or A625 with power supplies producing a minimum of 20 joules per flash meets FAR 23.1401 (f) effective August 11, 1971.

2. To complete the approval of those lights as anti-collision light systems, the installation on individual aircraft must be checked to show compliance with FAR 23.1401(b) (Field of Coverage); unless the "Installation and Service Manual for Whelen Anti-Collision Strobe Light Systems", dated 28 September 1978 specifically indicates that a particular installation has been checked for compliance with the aforementioned sub-section (Example: Bell 206A with lights installed at he specified locations).

   NOTE: The aforementioned installation and Service Manual contains an acceptable method for checking the adequacy of coverage when using two lights (wing-tip) or three lights (wing tips and tail lights). For some other acceptable methods see Advisory Circular AC 43.13-2 Chapter 4 Paragraph 46b(2). Installation made in accordance with STC SA800EA Amendments prior to 9/14/71 need only be checked for obstructed visibility to meet anti-collision light requirements.

3. Install the following placard, Whelen Part No. A421-1, or other FAA approved equivalent, in view of the pilot:

   "WARNING TURN OFF STROBE LIGHTS WHEN TAXING IN VICINITY OF OTHER AIRCRAFT OR DURING FLIGHT THROUGH CLOUDS, FOG OR HAZE. STANDARD POSITION LIGHTS TO BE ON FOR ALL NIGHT OPERATIONS."

4. On all helicopter installations, install the following placard in view of the pilot:

   "THE WHITE STROBE LIGHT MUST BE TURNED OFF DURING ALL NIGHT TAKEOFFS AND LANDINGS."

5. The modification approved by this STC can be installed in conjunction with those approved by STC SA615EA or STC SA738EA as delineated in the "Installation and Service Manual for Whelen Anti-collision Strobe Light System's"

6. On Mitsubishi MU-2B, MU-2B-10, -20, -15, -30 aircraft: Whelen's "Mitsubishi MU-2B, -10, -20, -15, -30 Wing Tip and Tail Strobe Light Installation Procedure", dated 19 February 1971, is required in addition to the "Installation and Service Manual for Whelen Anti-Collision Strobe light System".

7. This approval should not be incorporated in any aircraft of these specific models on which other approved modifications are incorporated, unless it is determined that the interrelationship between this change and any of those previously incorporated approved modifications will not introduce any adverse effect upon the airworthiness of the aircraft. This determination should include a night flight check as specified in AC 43.13-2 Chapter 4, Paragraph 42A.

NOTE: Aircraft whose application for type certification was made before April 1, 1957, may, but need not, comply with the field of coverage requirements of FAR 23(27).1401(b). Compliance with FAR 91.33(c) may be shown provided the light installation is in accordance with data approved prior to August 11, 1971, and applicable criteria of Advisory Circular 43.13-2 are met.

United States Of America

Department of Transportation - Federal Aviation Administration

Supplemental Type Certificate

Number SA800EA

This Certificate issued to Whelen Engineering Company, Inc.
Route 145, Winthrop Road
Chester, Connecticut 06412-0684

certifies that the change in the type design for the following product with the limitations and conditions therefor as specified hereon meets the airworthiness requirements of Part 3, 6, 23, 27 *of the* Civil Air/Federal Aviation *Regulations.*

Original Product Type Certificate Number : See Attached Eligibility List dated September 8, 1999

Make :

Model :

Description of Type Design Change:

Installation of Aviation White Anti-Collision Strobe Lights Whelen Models A429, A430, A434, A450, A470-R/W (Red/White), A470A-R/W (Red/ White), A500, A625, or A650 and associated power supplies or Model SA Strobe Light System in accordance with Whelen Installation and Service Manual dated January 1, 1985, or later FAA-approved revisions.

Limitations and Conditions:

1. The Aviation White Anti-Collision Lights listed under Description of Type Design Change meet the requirements of FAR 23 and the similarly numbered sections of FAR 27 as follows:

   a. 23.1397(c), 23.1401(c), (d), (e), effective August 11, 1971;
   b. 23.1401(f) in effect on August 10, 1971 (See STC Continuation Sheet)

(See continuation sheet 2 of 8)

The STC holder will provide each person it permits to use this certificate to alter the product written evidence of the agreement in a form acceptable to the Administrator.

This certificate and the supporting data which is the basis for approval shall remain in effect until surrendered, suspended, revoked or a termination date is otherwise established by the Administrator of the Federal Aviation Administration.

Date of application : May 2, 1969

Date reissued :

Date of issuance : November 14, 1969

Date amended : September 8, 1999

See page 3 for amendment history.

By direction of the Administrator

(Signature)

Ronald L. Vavruska
Manager
Boston Aircraft Certification Office

(Title)

Any alteration of this certificate is punishable by a fine of not exceeding $1,000, or imprisonment not exceeding 3 years, or both.

FAA Form 8110-2(10-68) Page 1 of 8 *This certificate may be transferred in accordance with FAR 21.47.*

CONTINUED PAGE 2 AND 3.

c. A408W and 470W with power supplies approved under STC SA615EA meet FAR 23.1401 (f) effective August 11, 1971.

d. A650 or A625 with power supplies producing a minimum of 20 joules per flash meets FAR 23.1401 (f) effective August 11, 1971.

2. To complete the approval of those lights as anti-collision light systems, the installation on individual aircraft must be checked to show compliance with FAR 23.1401(b) (Field of Coverage); unless the "Installation and Service Manual for Whelen Anti-Collision Strobe Light Systems", dated 28 September 1978 specifically indicates that a particular installation has been checked for compliance with the aforementioned sub-section (Example: Bell 206A with lights installed at he specified locations).

   NOTE: The aforementioned installation and Service Manual contains an acceptable method for checking the adequacy of coverage when using two lights (wing-tip) or three lights (wing tips and tail lights). For some other acceptable methods see Advisory Circular AC 43.13-2 Chapter 4 Paragraph 46b(2). Installation made in accordance with STC SA800EA Amendments prior to 9/14/71 need only be checked for obstructed visibility to meet anti-collision light requirements.

3. Install the following placard, Whelen Part No. A421-1, or other FAA approved equivalent, in view of the pilot:

   "WARNING TURN OFF STROBE LIGHTS WHEN TAXING IN VICINITY OF OTHER AIRCRAFT OR DURING FLIGHT THROUGH CLOUDS, FOG OR HAZE. STANDARD POSITION LIGHTS TO BE ON FOR ALL NIGHT OPERATIONS."

4. On all helicopter installations, install the following placard in view of the pilot:

   "THE WHITE STROBE LIGHT MUST BE TURNED OFF DURING ALL NIGHT TAKEOFFS AND LANDINGS."

5. The modification approved by this STC can be installed in conjunction with those approved by STC SA615EA or STC SA738EA as delineated in the "Installation and Service Manual for Whelen Anti-collision Strobe Light System's"

6. On Mitsubishi MU-2B, MU-2B-10, -20, -15, -30 aircraft: Whelen's "Mitsubishi MU-2B, -10, -20, -15, -30 Wing Tip and Tail Strobe Light Installation Procedure", dated 19 February 1971, is required in addition to the "Installation and Service Manual for Whelen Anti-Collision Strobe light System".

7. This approval should not be incorporated in any aircraft of these specific models on which other approved modifications are incorporated, unless it is determined that the interrelationship between this change and any of those previously incorporated approved modifications will not introduce any adverse effect upon the airworthiness of the aircraft. This determination should include a night flight check as specified in AC 43.13-2 Chapter 4, Paragraph 42A.

NOTE: Aircraft whose application for type certification was made before April 1, 1957, may, but need not, comply with the field of coverage requirements of FAR 23(27).1401(b). Compliance with FAR 91.33(c) may be shown provided the light installation is in accordance with data approved prior to August 11, 1971, and applicable criteria of Advisory Circular 43.13-2 are met.

(THIS IS A COMBINED REPRINT OF TWO STC.)
CONTACT WHELEN ENGINEERING COMPANY, INC. FOR THE LATEST ELIGIBILITY LIST.

NOTE: This eligibility list is for reference only. Whelen's PMA hardware can be installed on any aircraft using approved techniques and procedures found in this manual, and appropriate advisory circulars.

United States of America
Department of Transportation - Federal Aviation Administration

Supplemental Type Certificate

(Continuation Sheet)

Number SA615EA SA800EA

Date Amended: June 18, 1999

ELIGIBILITY LIST

The following aircraft have been approved for installation of the Whelen H Series (HS, HD, HR, HD, T, HT, AND SA-14 or -28 volt) Aviation Red or Aviation White Anti-Collision Strobe Light Systems,. Aircraft identified by ## are not included on STC SA615EA Eligibility list.

June 18, 1999

AIRCRAFT MANUFACTURER	MODEL	TYPE CERTIFICATE
AERO COMMANDER	100. 100-180	1A21
	111	A11SO
	112	A12SO
	500, 500-A, -B, -S, -U, 520, 560, 560A, 560E	6A1
	560F, 680, 680E, -F, 720, 680FL, 680FL(P), 680T, V, W, 681, 690, 685	2A4
AMERICAN AVIATION	AA-1, *AA-1A	A11EA
	AA-5	A16EA
BEECH	23, A23, A23A, A23-19, -24, -19A, B19, M19A, B23, C23, A24, A24R, C24R	A1CE
	35, A35, B35, C35, D35, E35, F35, G35, 35R	A-777
	H35, J35, K35, M35, N35, P35, S35, V35, V35A, V35B, 35-33, 35-A33, 35-B33, 35-C33, 35-C33A, 36, A36, E33, E33A, E33C, F33, F33A, F33C	3A15
	50(L-23A), B50(L-23B), C50, D50(L-23E), D50A, D50B, D50C, D50E, E50(L-23D, RL-23D), F50, G50, H50, J50	5A4
	95-55, 95-A55, 95-B55, (T45A) 95-B55D, 95C55, 95, B95, B95A, D95A, E95, D55, D55A, E55, E55A, 56TC, A56TC, A56TC,58	3A16
	65(L23F), A65, A65-8200, 65-8200, 65-80, 65-A80-8800, 65-B80, 65-88, B90, 65-90, 65-A90, 65-A90-1, (U21A, RU-21A, RU-21D), E90, 65-A90-2, (RU-21B), 65-A90-3 (RU-21C), 70	3A20
	60, A60 A	12CE
	99, 99A,100, 200	A14CE
BELLANCA	14-19-3A, 17-30, 17-30A, 17-31A, 17-31ATC	1A3
	7EC, 7ECA, 7FC, 7GC, 7GCA, 7GCAA, 7GCB, 7GCBA, 7GCBC, 7HC, 7JC, 7KCAB	A-759
BELL	206A, 206B, 206L, 206L-1, 206L-3, 206L-4, 407	H2SW
	47B, B3, D, D1, E, G, G-2, H1	H-1
	47G-2A, -2A-1, -3, -3B, -3B1, -3B-27, -4, -4A, -5, -5A	2H3
	47J, K, J-2, J-2A	2H1
BRITTEN NORMAN	BN-2, -2A, -2A-2, -2A-6, -2A-8	A17EU
	BN-2A, MK.III	A29EU
CESSNA	120, 140	A-768
	##140A	5A2
	150, 150A, B, C, D, E, F, G, H, J, K, L, M, A150K, A150L, A150M, 152, A152	3A19
	##170, 170A, 170B	A-799
	172, 172A, B, C, D, E, F, G, H, I, K, L, M, N, P, P172D, R172K	3A12

AIRCRAFT MANUFACTURER	MODEL	TYPE CERTIFICATE
CESSNA (continued)	P172D, 172RG, 175, 175A, B, D	3A17
	177, 177A, B	A13CE
	177RG	A20CE
	180, 180A, B, C, D, E, F, G, H, J, K	5A6
	182, 182A, B, C, D, E, F, G, H, J, K, L, M, N, P, Q, R, T182, R182, TR182	3A13
	185, 185A, B, C, D, E, A185E, A185F	3A24
	188, 188A, B, A188, A188A, A188B, A188C	A9CE
	##190, 195, 195A, B	A-790
	206, P206, P206A, B, C, D, E, TU206A, B, C, D, E, F, G, TP206A, B, C, D, E, U206, U206A, B, C, D, E, F, G	A4CE
	207, 207A, T207, T207A	A16CE
	210, 210A, B, C, D, E, F, G, H, J, K, L, N, T210F, G, H, J, K, L, M, N, 210-5(205, 210-5A(205A), 210-5A, P210N	3A21
	310, 310A, B, C, D, E, F, G, H, I, J, 310J-1, E310J, 310K, L, N, P, 310Q, T310P, Q, 310R	3A10
	*320, 320A, B, C, D, E, F, 320-1, 340, 340A	3A25
	*336	A2CE
	337, 337A, B, C, D, E, F, T337D, E, F, G	A6CE
	*401, 401A, B, 402, 402A, B, 411, 411A, 421, 421A, 414, 421B	A7CE
DeHAVILLAND OF CANADA	DHC-2 MK.I, MK.II, MK.III	A-806
	DHC-3	A-815
	DHC-6, Models 1, 100, 110, 200, 210, 300	A9EA
FAIRCHILD HILLER	FH-1100	H2WE
GRUMMAN	##G-164, G-164A, G-164B	1A16
HELIO	H-250, H-295, H-391, H-391B, H-395, H-395A	1A8
HUGHES	269A, B, C, 269A-1	4H12
	369, 369A, H, HM, HS, HE	H3WE
PIPER	PA-11	A-691
	PA-12	A-780
	PA-14	A-797
	PA-15	A-800
	PA-16	1A1
	PA-17	A-805
	PA-18 Series, PA-19	1A2
	PA-20	1A4
	PA-22 Series	1A6
	PA-25 Series	2A8
	PA-23, PA-23-160. *PA-23-235, *PA-23-250, *PA-E23-250	1A10
	PA-24-180, PA-24, -24-250, -24-260, -24-400	1A15
	PA-28-140, -28-150, -28-151, -28-160, -28-161, -28-180, -28-235, -28S-160, -28R-180, -28S-180, -28-181, -28R-200, -28R-201, -28R-201T, -28RT-201, -28RT-201T, -28-201T, -28-236	2A13
	PA-30, PA-39, 151, 161	A1EA
	PA-31P	A8EA
	PA-31, PA-31-300, 325, 350	A20SO
	PA-32-260. -300, PA-32S-300, R300, R301T	A3SO
MOONEY	##M20B, C, D, E, F, G, J, K, L, M	2A3
MITSUBISHI	##MU-2B, MU-2B-10, -15, -20, -30	A2PC
UNIVAIR (STINSON)	##108, 108-1, -2, -3, -5	A-767

NOTES TO ELIGIBILITY LIST:

* Aircraft as marked require specific attention to proper balancing of the rudder. Refer to the Manufacturer's Service Manual for balancing instructions.

GJB

US Department of Transportation
Federal Aviation Administration

MAJOR REPAIR AND ALTERATION
(Airframe, Powerplant, Propeller, or Appliance)

Form Approved
OMB No. 2120-0020

For FAA Use Only

Office Identification
F500 EA-25-TEB

INSTRUCTIONS: Print or type all entries. See FAR 43.9, FAR 43 Appendix B, and AC 43.9-1 (or subsequent revision thereof) for instructions and disposition of this form. This report is required by law (49 U.S.C. 1421). Failure to report can result in civil penalty not to exceed $1,000 for each such violation (Section 901 Federal Aviation Act of 1958).

1. Aircraft	Make: Mooney	Model: M20C
	Serial No.: 3372	Nationality and Registration Mark: N953MA
2. Owner	Name *(As shown on registration certificate)*: Michael R. Coren	Address *(As shown on registration certificate)*: P.O. Box 338 Central Valley, NY 10917

3. For FAA Use Only

4. Unit Identification				5. Type	
Unit	Make	Model	Serial No.	Repair	Alteration
AIRFRAME	*(As described in Item 1 above)*				X
POWERPLANT					
PROPELLER					
APPLIANCE	Type				
	Manufacturer				

6. Conformity Statement

A. Agency's Name and Address	B. Kind of Agency		C. Certificate No.
Jeffrey Edward Saye 36 Wheeler Ave. Warwick, NY 10990	X	U.S. Certificated Mechanic	104566816
		Foreign Certificated Mechanic	
		Certificated Repair Station	
		Manufacturer	

D. I certify that the repair and/or alteration made to the unit(s) identified in item 4 above and described on the reverse or attachments hereto have been made in accordance with the requirements of Part 43 of the U.S. Federal Aviation Regulations and that the information furnished herein is true and correct to the best of my knowledge.

Date	Signature of Authorized Individual
June 21, 2005	

7. Approval for Return To Service

Pursuant to the authority given persons specified below, the unit identified in item 4 was inspected in the manner prescribed by the Administrator of the Federal Aviation Administration and is ☒ APPROVED ☐ REJECTED

BY							
		FAA Flt. Standards Inspector		Manufacturer	X	Inspection Authorization	Other *(Specify)*
		FAA Designee		Repair Station		Person Approved by Transport Canada Airworthiness Group	

Date of Approval or Rejection	Certificate or Designation No.	Signature of Authorized Individual
June 21, 2005	1466324	

FAA Form 337 (12-88)

NOTICE

Weight and balance or operating limitation changes shall be entered in the appropriate aircraft record. An alteration must be compatible with all previous alterations to assure continued conformity with the applicable airworthiness requirements.

8. Description of Work Accomplished
(If more space is required, attach additional sheets. Identify with aircraft nationality and registration mark and date work completed.)

Mooney M20C sn: 3372 N953MA Tach:4390.60 TTAF:4390.60 June 21, 2005

1) Installed M20 Oil Seperator, LLC-Air Oil Seperator

2) This Installation is approved under STC SA02033AT.

3) STC SA02033AT was issued November 19,1999 amended January 09, 2003 to M-20 Oil Seperators, LLC.

4) Installation IAW M20 Oil Seperators, LLC Installation Instruction dated July 01, 1999 and revised January 24, 2005

5) Weight and Balance and Equipment List Revised.

6) Log Book Entry Reflects this installation.

7) A copy of the STC and AML has been added to the permanent records of this aircraft.

8) Instructions for Continued Airworthiness will be found in the installed manufacturer's maintenance manual and incorporated into the current aircraft inspection program, Oyherwise the Scope and Details of FAR 43, Appendix D will apply.

----------END----------

Additional Sheets Are Attached

United States of America
Department of Transportation — Federal Aviation Administration

Supplemental Type Certificate

Number SA02033AT

This certificate issued to M-20 Oil Separators, LLC
5612 NW 38th Terrace
Boca Raton, FL 33496-2719

*certifies that the change in the type design for the following product with the limitations and conditions therefor as specified hereon meets the airworthiness requirements of Part * of the Regulations.*

Original Product - Type Certificate Number: *

Make: * *
Model: * *

* See Continuation sheets 3 thru 24.

Description of Type Design Change: Modification to Install an air-oil separator, to prevent oil from being aspirated from the engine breather line, in accordance with M-20 Turbos, Inc./M-20 Oil Separators, LLC, Assembly Drawing No. 303, Rev. B dated October 13, 1999 or 403, Rev. None, dated December 08, 2000 and Installation drawing no. 304, Rev None, dated September 27, 1999 or 404 Rev. None, dated December 08, 2000 Installation Instruction, Air/Oil Separator dated July 1, 1999, or later FAA approved revisions.

Limitations and Conditions: Airplane Flight Manual Supplement is not part of this STC. This approval should not be extended to other aircraft of these models on which other previously approved modifications are incorporated unless it is determined by the installer that the interrelationship between this change and any of those other previously approved modifications will introduce no adverse effects upon the airworthiness of the aircraft. If the holder agrees to permit another person to use this certificate to alter the product, the holder shall give the other person written evidence of that permission.

This certificate and the supporting data which is the basis for approval shall remain in effect until surrendered, suspended, revoked or a termination date is otherwise established by the Administrator of the Federal Aviation Administration.

Date of application: May 05, 1999

Date of issuance: November 19, 1999

Date reissued: March 16, 2000; September 19, 2000; January 18, 2001

Date amended: February 28, 2000; December 21, 2000; December 10, 2001; May 22, 2002; January 09, 2003

By direction of the Administrator

Jerry Robinette
(Signature)
for Melvin D. Taylor
Manager
Atlanta Aircraft Certification Office
(Title)

Any alteration of this certificate is punishable by a fine of not exceeding $1,000, or imprisonment not exceeding 3 years, or both.

This certificate may be transferred in accordance with FAR 21.47.

United States of America
Department of Transportation - Federal Aviation Administration

Supplemental Type Certificate

(Continuation Sheet)

Number SA02033AT

Date of Issuance: November 19, 1999
Date Amended: February 28, 2000; December 21, 2000; November 1, 2001; May 22, 2002, January 09, 2003
Date Reissued: March 16, 2000; September 19, 2000; January 18, 2001

Model 300 Eligibility Continued:

Type Certificate Number	Model	Airworthiness Requirements
LUSCOMBE:		
A-694	8, 8A, 8B, 8C, 8D, 8E, 8F, T-8F	CAR 4a
A-804	11A	CAR 3
MAULE:		
3A23	Bee Dee M-4, M-4, M-4C, M-4S, M-4T, M-4-180C, M-4-180S, M-4-180T, M-4-210, M-4-210C, M-4-210S, M-4-210T, M-4-220, M-4-220C, M-4-220S, M-4-220T M-5-210C, M-5-210TC, M-5-220C, M-5-235C, M-6-180, M-6-235, M-7-235, MX-7-235, MX-7-180,	CAR 3, FAR 23
MICCO AIRCRAFT CO. (Meyers):		
3A1	MAC-125C, MAC-145, MAC-145A	CAR 4a. FAR23
MOONEY AIRCRAFT CORPORATION:		
2A3	M20, M20A, M20B, M20C, M20D, M20E, M20F, M20G, M20J, M20K, M20M, M20R, M20S	CAR 3, FAR 23
A6SW	M-22	CAR 3
MOONEY MITE AIRCRAFT CORP.		
A-803	M18-L, M18-C, M18-LA, M18-C55	CAR 3
MOROVAN NATIONAL CORP. (Zlin)		
A30EU	Zlin 526L	FAR21,23
NAVAL AIRCRAFT FACTORY:		
A-2-569	N3N-3	CAR 4a
NAVION		
A-782	Navion (L-17A), Navion A (L-17B, L-17C), Navion B, Navion D, Navion E, Navion F, Navion G, Navion H	CAR 3
PARTENAVIA:		
A31EU	P68, P68B, P68C, P68C-TC, P68 "Observer," P68 "Observer 2, " P68 TC "Observer"	FAR 23, 36

EA2520050377 3

US Department of Transportation
Federal Aviation Administration

MAJOR REPAIR AND ALTERATION
(Airframe, Powerplant, Propeller, or Appliance)

Form Approved
OMB No. 2120-0020

For FAA Use Only

Office Identification
AEA-FSDO-25DXS

INSTRUCTIONS: Print or type all entries. See FAR 43.9, FAR 43 Appendix B, and AC 43.9-1 (or subsequent revision thereof) for instructions and disposition of this form. This report is required by law (49 U.S.C. 1421). Failure to report can result in civil penalty not to exceed $1,000 for each such violation (Section 901 Federal Aviation Act of 1958).

1. Aircraft	Make: Mooney	Model: M20C
	Serial No.: 3372	Nationality and Registration Mark: N953MA
2. Owner	Name *(As shown on registration certificate)*: Michael R. Coren	Address *(As shown on registration certificate)*: Box 338, Central Valley, NY 10917

3. For FAA Use Only

4. Unit Identification / **5. Type**

Unit	Make	Model	Serial No.	Repair	Alteration
AIRFRAME	*(As described in Item 1 above)*				X
POWERPLANT					
PROPELLER					
APPLIANCE	Type / Manufacturer				

6. Conformity Statement

A. Agency's Name and Address	B. Kind of Agency	C. Certificate No.
Edelmiro Cruz Hernandez 25 Prospect Hill Road Cuddebackville, NY 12729	X U.S. Certificated Mechanic Foreign Certificated Mechanic Certificated Repair Station Manufacturer	1466324

D. I certify that the repair and/or alteration made to the unit(s) identified in item 4 above and described on the reverse or attachments hereto have been made in accordance with the requirements of Part 43 of the U.S. Federal Aviation Regulations and that the information furnished herein is true and correct to the best of my knowledge.

Date	Signature of Authorized Individual
June 01, 2004	Edelmiro Cruz Hernandez

7. Approval for Return To Service

Pursuant to the authority given persons specified below, the unit identified in item 4 was inspected in the manner prescribed by the Administrator of the Federal Aviation Administration and is ☒ APPROVED ☐ REJECTED

BY							Other *(Specify)*
		FAA Flt. Standards Inspector		Manufacturer	X	Inspection Authorization	
		FAA Designee		Repair Station		Person Approved by Transport Canada Airworthiness Group	

Date of Approval or Rejection	Certificate or Designation No.	Signature of Authorized Individual
June 01, 2004	1466324	Edelmiro Cruz Hernandez

FAA Form 337 (12-88)

NOTICE

Weight and balance or operating limitation changes shall be entered in the appropriate aircraft record. An alteration must be compatible with all previous alterations to assure continued conformity with the applicable airworthiness requirements.

8. Description of Work Accomplished
(If more space is required, attach additional sheets. Identify with aircraft nationality and registration mark and date work completed.)

N953MA Mooney M20C S/N: 3372 Tach: 4430 TTAF: 4430 Date: June 01, 2004

1. Removed original equipment air filter (paper type) and installed Brackett Air Filter assembly Model No. BA-6110 as per Brackett Instruction Sheet part number BA-6105 , revision date 04/12/04, as listed in STC SA71GL, issued to Brackett Aero Filters, Inc. on February 21, 1975, latest re-issue June 20, 2000, amended April 17,1995.

2. STC was used as Approved Data for this installation.

3. All work was accomplished as per manufacturer's installation instructions.

4. This installation has no obvious effect on other aircraft systems.

5. Equipment list was revised to reflect this installation and inserted in the Aircraft Records.

6. Logbook entries have been made to reflect this installation.

7. Weight and Balance , N/A

8. Instruction for Continued Airworthiness, if applicable will be found in the Brackett Air Filter Document I-194 and incorporated into the current aircraft's inspection program, otherwise the scope and detail of FAR 43, Appendix D will apply.

——————————END——————————

X Additional Sheets Are Attached

United States Of America
Department of Transportation - Federal Aviation Administration

Supplemental Type Certificate

Number SA71GL

This Certificate issued to: BRACKETT AERO FILTERS, INC.
7052 Government Way
Kingman, Arizona 86401

certifies that the change in the type design for the following product with the limitations and conditions thereto as specified hereon meets the airworthiness requirements of Part * of the * Regulations.

Original Product Type Certificate Number: * *See attached Approved Model List (AML)

Model: *(AML) No. SA71GL for list of approved aircraft

Model: *models and applicable airworthiness regulations.

Description of Type Design Change: Installation of air filters in accordance with AML No. SA71GL dated April 17, 1995, or later FAA approved revision.

Limitations and Conditions: Approval of this change in type design applies to the above aircraft model(s) only. This approval should not be extended to aircraft of this model on which other previously approved modifications are incorporated unless it is determined that the interrelationship between this change and any of those other previously approved modifications will introduce no adverse effect upon the airworthiness of that aircraft. A copy of this Certificate and FAA Approved Model List (AML) No. SA71GL dated April 17, 1995, or later FAA approved revision must be maintained as part of the permanent records for the modified aircraft.

This certificate and the supporting data which is the basis for approval shall remain in effect until surrendered, suspended, revoked or a termination date is otherwise established by the Administrator of the Federal Aviation Administration.

Date of application: January 9, 1975

Date of issuance: February 21, 1975

Date revised: March 3, 1983, June 20, 2000

Date amended: April 17, 1995

By direction of the Administrator

for (Signature)
Manager, Tech. and Admin. Support Staff
Los Angeles Aircraft Certification Office
(Title)

Any alteration of this certificate is punishable by a fine of not exceeding $1,000, or imprisonment not exceeding 3 years, or both.

FAA Form 8110-2 (110-90) Page 1 of 2

This certificate may be transferred in accordance with FAR 21.47.

FAA APPROVED MODEL LIST (AML) NO. SA71GL
BRACKETT AERO FILTERS, INC.
FOR
INSTALLING AIR FILTERS

Issue Date: April 17, 1995

ITEM	AIR FILTER MODEL NUMBER	TOP DRAWING NUMBER	TOP DRAWING REVISION & DATE	AIRCRAFT MAKE	AIRCRAFT MODEL	ORIGINAL TYPE CERTIFICATE NUMBER	CERT. BASIS	AML AMENDMENT DATE
38	BA-5810	BA-5810	D 11/22/94	Cessna	172RG	3A17	CAR 3	—
				Cessna	T337B/C/D/E/F/GH, P337H, T337H-SP (Rear Engine Only)	A6CE	CAR 3	—
				*** END OF DATA ***				
39	BA-6110	BA-6110	C 6/7/95	Mooney	M20/A/B/C/D, M20G	2A3	CAR 3	7/12/95
				Mauke	M-4, M-4C, M-4S, M-4T, M-4-220, M-4-220C, M-4-220S, M-4-220T, M-4-180C, M-4-180S, M-4-180T, M-5-220C, M-5-235C, M-5-180C, M-5-210TC, M-6-180, M-6-235, M-7-235, MX-7-180	3A23	CAR 3	7/12/95
				*** END OF DATA ***				
40	BA-6210	BA-6210	C 6/13/95	Mooney	M20J	2A3	CAR 3	—
				*** END OF DATA ***				
41	BA-6210-1	BA-6210-1	N/C 10/25/95	Beech	95-C55, 95-C55A, D55, D55A, E55, E55A (SN TE-769 thru SN 1E-1078), 58 (SN TH-1 thru TH-740)	3A16	CAR 3	—
				*** END OF DATA ***				

BRACKETT AERO FILTERS, INC.

INSTRUCTIONS

ASSEMBLY PART NO. BA-6110

APPROVED ON AIRCRAFT MODELS: SEE FAA APPROVED APPLICABILITY LIST.

REPLACES: Mooney PN 13219

FAA APPROVAL DATA: STC-SA71GL LIST NO. 1
FAA-PMA SUPPLEMENT NO. 1

Your new polyurethane air filter element has been designed to provide maximum dust collecting efficiency, non-restrictive air flow, and economical element replacement, while maintaining a lightweight filter. The element has been treated with a distinctive treatment called a wetted agent and is approximately 98% efficient. The wetted agent is an accompaniment in the efficient capturing of dust. In addition, the element has received a fire retardant treatment. For the above reasons, replace the element each 100 hours of use/12 months or when 50% covered with foreign material. DO NOT WASH AND REUSE.

INSTALLATION INSTRUCTIONS

STEP 1. Remove filter cover plate PN 650029-000 from the cowl.
STEP 2. Unscrew the existing filter PN 13219 and discard.
STEP 3. Inspect flex duct and heat box for condition making sure valve shaft and bushing is not worn. If un-airworthy, repair or replace worn carburetor heat box.
STEP 4. Make sure flex duct is in position in front of the cowl opening and with the holes aligned. Screw the frame in place with 4 ea. MS35206-246 screws. Select a Phillips screw driver of a small enough diameter to slip through the four holes in the front of the frame.
STEP 5. Install filter element PN BA-6108, making sure the taper of element is the same as the taper of the frame and contact is being made on all sides.
STEP 6. Install grill with the 2 legs under the frame and the cross bars facing out. Align the piano hinges and insert safety pin making sure it is in the locked position.
STEP 7. Re-install cover plate on the cowl.
STEP 8. For all future element replacements, only remove safety pin and grill, then remove and replace element PN BA-6108.
STEP 9. NOTE: After initial installation of filter assembly, fill out FAA form 337 for return to service. On future replacement of parts this form will not be required.

SERVICING: Under normal conditions, replace filter element, PN BA-6108, after 100 hours use or 1 year intervals. Under severely dusty conditions, check daily and replace when element is 50% covered with foreign material. For Continued Airworthiness see Form I-194.

Mfg. by:
BRACKETT AERO FILTERS, INC.
Kingman, AZ

BRACKETT AIR FILTER DOCUMENT I-194

PLACE IN AIRCRAFT RECORDS

CONTINUED AIRWORTHINESS INSPECTION
REQUIREMENTS AS PER FAR 23.1529
AND GENERAL PROCEDURES OF PART 43

INSPECTION INTERVALS: Pre-flight inspections, engine backfire inspection, 100 hour inspections, annual inspections, filter element replacements.

INSPECTION PROCEDURES

A. Pre-flight inspection: Per Pilots Operating Handbook, check filter assembly for security, damage or 50% contamination of element face. If found report to maintenance personnel prior to flight.

B. Engine start-up backfire inspection: Prior to flight, check the entire intake system for security or damage. If a fire was present, the downstream face of the foam element will show erosion. If any irregularities are found see Chart I and also refer to the Aircraft Maintenance Manual for the intake system.

C. At element replacement intervals: With the element removed, inspect the filter grill, filter frame, filter mountings and entire intake system for security, wear and any deformation. Note: On filter assemblies with gaskets, visually inspect inside and outside of frame for any signs of gasket looseness, movement or deterioration. If found refer to Chart I or the proper maintenance manual for your aircraft or component.

PART	REPLACE	REWORK	INSTRUCTIONS
FRAME	X		COMPLETE NEW ASSEMBLY
GASKET	X		ON FILTER FRAME, REMOVE OLD NEOPRENE GASKET AND ALL TRACES OF ADHESIVE DOWN TO A CLEAN ANODIZED FRAME SURFACE. USE ADHESIVE 3M#847 OR DOW CORNING RTV-732. COAT ENTIRE MATING SURFACE (GASKET TO FRAME). APPLY ADHESIVE FOLLOWING MANUFACTURER'S LABEL DIRECTIONS. WHEN FRAME AND GASKET ARE PLACED TOGETHER, CLAMP OR WEIGHT DOWN AT .75 LB./SQ. IN. OF CONTACT AREA. ALLOW TO CURE 24 HOURS PRIOR TO INSTALLATION. PRIOR TO REINSTALLATION OF FILTER, CHECK AIRBOX MATING SURFACE FOR IRREGULARITIES. IF FOUND, CORRECT PER MANUFACTURER'S REQUIREMENTS. UPON REINSTALLATION CHECK THAT THE GASKET MAKES 100% CONTACT. THE GASKET SHOULD BE COMPRESSED 50% FOR OPTIMUM SEAL.
GRILL	X		REPLACE WITH NEW GRILL
HARDWARE	X		REPLACE UNSERVICEABLE WITH NEW
SCREEN	X		COMPLETE NEW ASSEMBLY
SCREEN/GASKET	X		COMPLETE NEW ASSEMBLY (ASSEMBLIES USING SCREEN GASKETS PRE 1981: BA-4106, BA-5110 AND BA-8110.)
ELEMENT	X		REPLACE ELEMENT

CAE

US Department of Transportation
Federal Aviation Administration

MAJOR REPAIR AND ALTERATION
(Airframe, Powerplant, Propeller, or Appliance)

Form Approved
OMB No. 2120-0020

For FAA Use Only

Office Identification
AEA-FSDO-25

INSTRUCTIONS: Print or type all entries. See FAR 43.9, FAR 43 Appendix B, and AC 43.9-1 (or subsequent revision thereof) for instructions and disposition of this form. This report is required by law (49 U.S.C. 1421). Failure to report can result in civil penalty not to exceed $1,000 for each such violation (Section 901 Federal Aviation Act of 1958).

1. Aircraft	Make Mooney	Model M20C
	Serial No. 3372	Nationality and Registration Mark N953MA
2. Owner	Name *(As shown on registration certificate)* Michael R. Coren	Address *(As shown on registration certificate)* Box 338 Central Valley, NY 10917

3. For FAA Use Only

"The data identified herein complies with the applicable airworthiness requirements and is approved for the above described aircraft, subject to conformity inspection by a person authorized in FAR 43.7."

Approving Inspector Date:Oct.04, 2004
AEA-FSD0-25
Charles A. Emering

4. Unit Identification / **5. Type**

Unit	Make	Model	Serial No.	Repair	Alteration
AIRFRAME	*(As described in Item 1 above)*				X
POWERPLANT					
PROPELLER					
APPLIANCE	Type Manufacturer				

6. Conformity Statement

A. Agency's Name and Address	B. Kind of Agency	C. Certificate No.
Edelmiro Cruz Hernandez 25 Prospect Hill Road Cuddebackville, NY 12729	X U.S. Certificated Mechanic Foreign Certificated Mechanic Certificated Repair Station Manufacturer	1466324

D. I certify that the repair and/or alteration made to the unit(s) identified in item 4 above and described on the reverse or attachments hereto have been made in accordance with the requirements of Part 43 of the U.S. Federal Aviation Regulations and that the information furnished herein is true and correct to the best of my knowledge.

Date	Signature of Authorized Individual
June 01, 2004	Edelmiro Cruz Hernandez

7. Approval for Return To Service

Pursuant to the authority given persons specified below, the unit identified in item 4 was inspected in the manner prescribed by the Administrator of the Federal Aviation Administration and is ☑ APPROVED ☐ REJECTED

BY							Other *(Specify)*
		FAA Flt. Standards Inspector		Manufacturer	X	Inspection Authorization	
		FAA Designee		Repair Station		Person Approved by Transport Canada Airworthiness Group	

Date of Approval or Rejection	Certificate or Designation No.	Signature of Authorized Individual
June 01, 2004	1466324	Edelmiro Cruz Hernandez

FAA Form 337 (12-88)

NOTICE

Weight and balance or operating limitation changes shall be entered in the appropriate aircraft record. An alteration must be compatible with all previous alterations to assure continued conformity with the applicable airworthiness requirements.

8. Description of Work Accomplished
(If more space is required, attach additional sheets. Identify with aircraft nationality and registration mark and date work completed.)

N953MA Mooney M20C S/N: 3372 Tach: 4430 TTAF: 4430 Date: June 01, 2004

1. Removed II Morrow Appollo 611 Loran in center stack and installed a Garmin GPS 300XL com/nav system at same location. Unit meets TSO-C129 Class A-1.

2. Unit wired to buss using inline 10 amp fuse using wiring diagram below.

3. Unit installed for VFR Flight, and placarded "FOR VFR USE ONLY" in accordance with Garmin Installation Manual P/N 190-00067-22 Rev. E dated Sept. 2000. AC 43.13-2A chapter 2 par. 21, 22 and 23a, and AC 20-138A par. 9 and appendix 5.

4. This installation has no obvious effect on other aircraft systems. EMI check performed in accordance with AC-25-10 par. 5F and N. AC 43.13-1B chapter 11 sec. 8, par. 11-106 and 11-107.

5. Electrical load analysis performed and this system does not exceed 80 % of alternator load in accordance with AC 43.13-1B chap. 11, sec. 3, par. 11.30, 11.36, and 11.37.

6. Flight manual supplement has been added to the permanent records of this aircraft.

7. Logbook entries have been made to reflect this installation.

8. Weight and Balance revised, equipment list updated.

9. Compass swung and card revised in accordance with AC 43.13-1B chap. 12, sec. 3, par. 12.37.

10. See attached ICA.

----------END----------

X Additional Sheets Are Attached

N953MA Mooney M20C S/N: 3372 Tach: 4430 TTAF: 4430 Date: June 01, 2004

Installed a Garmin GPS 300XL com/nav system.

11. **Instructions for continued airworthiness.**

1. Introduction: see above.
2. Description: see above.
3. Control, operation information: See Block 8 number 3 of attached 337 for installation/operation manual number.
4. Servicing information: See appropriate manufacturer's maintenance manual.
5. Maintenance instructions: None required.
6. Troubleshooting information: Check circuit breaker for power and on/off switch for function.
7. Removal or replacement information: Unit can be removed from aircraft in conventional manner.
8. Diagrams: See attached diagram.
9. Special inspection requirements: N/A
10. Application of protection treatments: N/A
11. Data relative: N/A
12. List of special tools: N/A
13. Commuter category: N/A
14. Recommended overhaul periods: No overhaul time is required.
15. Airworthiness limitation section: N/A
16. Revision: A letter will be submitted to the local FSDO with a copy of the revised FAA form 337 and revised ICA.
17. Assistance: N/A
18. Implementation of record keeping: See aircraft's airframe logbook for entry dated 06/01/04 and AFM supplement section.

B

GARMIN

GPS155XL/300XL

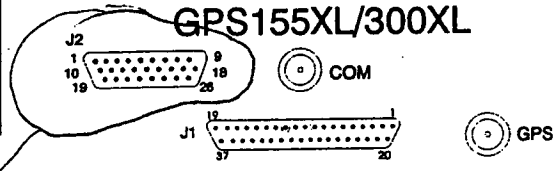

FOR J1 CONNECTIONS SEE PAGE B-30

J102

26	REMOTE ENTER (OPTIONAL)
5	COM AUDIO HI *‡
6	COM AUDIO LO *‡
8	INTERCOM MIC *‡
2	MIC AUDIO HI *‡
4	MIC KEY *‡
3	*‡
10	COM REMOTE TRANSFER (OPTIONAL)*‡
12	TX INTERLOCK*‡
13	GPS SEQUENCE HOLD LOW
14	ALTITUDE D4
15	ALTITUDE A1
16	ALTITUDE A2
17	ALTITUDE A4
18	ALTITUDE B1
19	ALTITUDE B2
20	ALTITUDE B4
21	ALTITUDE C1
22	ALTITUDE C2
23	ALTITUDE C4
24	ALTITUDE COMMON
25	GROUND

NOTES

* ‡ USED ONLY ON GNC 300XL

GARMIN

GPS155XL/300XL

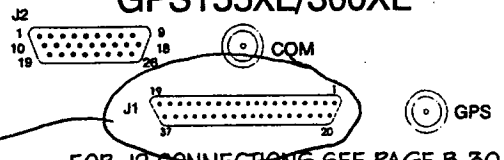

FOR J2 CONNECTIONS SEE PAGE B-30

J1

21	A+ POWER INPUT *‡
25	A+ POWER INPUT *‡
22	COM GROUND
26	COM GROUND
30	BATTERY+
29	CHARGE ENABLE
34	A/C GROUND

REMOTE BATTERY PACK (011-00182-00)

*§ 5, 4, 3, 6, *§ 7, 2, *§ 1

TO +14VDC A/C POWER BUSS

3	+FLAG
4	- FLAG
	FROM
2	TO
1	+LEFT
	+RIGHT
14	ROTOR C
	ROTOR H
37	STATOR F
	STATOR G
35	STATOR D
	STATOR E
17	RS 232 DATA IN 1 HI
	RS 232 DATA IN 1 LO
24	RS 232 DATA OUT 1 HI
	RS 232 DATA OUT 1 LO
20	MESSAGE ANNUN
12	ARRIVAL ANNUN
9	APPR ARM LOW
28	APPR ARM ANNUN
13	APPR ACTV ANNUN
19	RS 232 DATA OUT 2 HI
	RS 232 DATA OUT 2 LO
7	GPS OBI CLOCK
8	GPS OBI DATA
23	GPS OBI SYNC
10	GPS SUPER FLAG (500 MA SOURCE)
15	ARINC 429 OUT B
16	ARINC 429 OUT A
32	ARINC 429 IN A
33	ARINC 429 IN B

NOTES

* § USED ON 6-12 FOOT CONNECTIONS
* ‡ ON GNC 300XL POWER INPUT CANNOT EXCEED 14VDC ON GPS 155XL UNITS POWER INPUT CAN BE 14-28 VDC

US Department of Transportation
Federal Aviation Administration

MAJOR REPAIR AND ALTERATION
(Airframe, Powerplant, Propeller, or Appliance)

Form Approved
OMB No. 2120-0020 C4C

For FAA Use Only

Office Identification
AEA-FSDO-25

INSTRUCTIONS: Print or type all entries. See FAR 43.9, FAR 43 Appendix B, and AC 43.9-1 (or subsequent revision thereof) for instructions and disposition of this form. This report is required by law (49 U.S.C. 1421). Failure to report can result in civil penalty not to exceed $1,000 for each such violation (Section 901 Federal Aviation Act of 1958).

1. Aircraft	Make Mooney	Model M20C
	Serial No. 3372	Nationality and Registration Mark N953MA
2. Owner	Name *(As shown on registration certificate)* Michael R. Coren	Address *(As shown on registration certificate)* Box 338 Central Valley, NY 10917

3. For FAA Use Only

"The data identified herein complies with the applicable airworthiness requirements and is approved for the above described aircraft, subject to conformity inspection by a person authorized in FAR 43.7."

Approving Inspector Date:Aug.11, 2004
AEA-FSD0-25
Charles A. Emering

4. Unit Identification / **5. Type**

Unit	Make	Model	Serial No.	Repair	Alteration
AIRFRAME	*(As described in Item 1 above)*				X
POWERPLANT					
PROPELLER					
APPLIANCE	Type Manufacturer				

6. Conformity Statement

A. Agency's Name and Address	B. Kind of Agency		C. Certificate No.
Edelmiro Cruz Hernandez 25 Prospect Hill Road Cuddebackville, NY 12729	X	U.S. Certificated Mechanic	1466324
		Foreign Certificated Mechanic	
		Certificated Repair Station	
		Manufacturer	

D. I certify that the repair and/or alteration made to the unit(s) identified in item 4 above and described on the reverse or attachments hereto have been made in accordance with the requirements of Part 43 of the U.S. Federal Aviation Regulations and that the information furnished herein is true and correct to the best of my knowledge.

Date	Signature of Authorized Individual
June 01, 2004	Edelmiro Cruz Hernandez

7. Approval for Return To Service

Pursuant to the authority given persons specified below, the unit identified in item 4 was inspected in the manner prescribed by the Administrator of the Federal Aviation Administration and is ☒ APPROVED ☐ REJECTED

BY							Other *(Specify)*
		FAA Flt. Standards Inspector		Manufacturer	X	Inspection Authorization	
		FAA Designee		Repair Station		Person Approved by Transport Canada Airworthiness Group	

Date of Approval or Rejection	Certificate or Designation No.	Signature of Authorized Individual
June 01, 2004	1466324	Edelmiro Cruz Hernandez

FAA Form 337 (12-88)

NOTICE

Weight and balance or operating limitation changes shall be entered in the appropriate aircraft record. An alteration must be compatible with all previous alterations to assure continued conformity with the applicable airworthiness requirements.

8. Description of Work Accomplished
(If more space is required, attach additional sheets. Identify with aircraft nationality and registration mark and date work completed.)

N953MA Mooney M20C S/N: 3372 Tach: 4430 TTAF: 4430 Date: June 01, 2004

1. Installed an Aircraft Instrument and Development Remote Compass System which meets TSO-C7d.

2. Remote indicator P/N 17-114 installed at windshield center post.

3. Inverter P/N 53-1100-4 installed at R/H side of fuselage 4 inches aft of firewall using 4 8/32 screws and nuts.

4. Transmitter installed at back of fuselage bulkhead assembly P/N 350025-501 by using two aluminum angles 2024T3 3.25 x 3.25 x 1/4 inches bolted at each end to bulkhead assembly by using two MS35207-260 screws and two AN364-1032 nuts.

5. Installation accomplished in accordance with AC 43.13-2A Ch.1 and Ch. 2 fig. 2.9, par. 25. Structurally tested all units in accordance with AC 43.13-2A Ch. 1 par. 3A through 3D. Test was satifactory.

6. System wired to buss with 5 amp inline fuse and S.PS.T. switch

7. Electrical load analysis performed and this system does not exceed 80 % of alternator load in accordance with AC 43.13-1B chap. 11, sec. 3, par. 11.30, 11.36, and 11.37.

8. This unit is an optional installation only and does not replace existing compass.

9. No Flight manual supplement required.

10. Weight and Balance revised, equipment list updated.

11. See attached ICA.

----------END----------

X Additional Sheets Are Attached

* U.S.G.P.O. 1990-761-753

Mooney M20C S/N 3372 TT: 4430 Date: June 1, 2004 N953MA

Installed a Aircraft Instrument and development remote compass system.

11. Instructions for continued airworthiness.

1. Introduction: see above
2. Description: see above
3. Control, operation information: See Block 8 of attached 337 for installation/operation manual number.
4. Servicing information: See appropriate manufacturer's maintenance manual.
5. Maintenance instructions: None required.
6. Troubleshooting information: Check circuit breaker for power and on/off switch for function.
7. Removal or replacement information: Unit can be removed from aircraft in conventional manner.
8. Diagrams: See block 8 of attached 337. .
9. Special inspection requirements: N/A
10. Application of protection treatments: N/A
11. Data relative: N/A
12. List of special tools: N/A
13. Commuter category: N/A
14. Recommended overhaul periods: No overhaul time required.
15. Airworthiness limitation section: N/A
16. Revision: A letter will be submitted to the local FSDO with a copy of the revised FAA form 337 and revised ICA.
17. Assistance: N/A
18. Implementation and record keeping. See aircraft's airframe logbook for entry dated 06 /01/04 and AFM supplement section.

----------END----------

REMOTE COMPASS WIRING DIAGRAM.

Connect the units as shown below. Shielded cable is not required.
If additional indicators are added they should be wired in parallel.

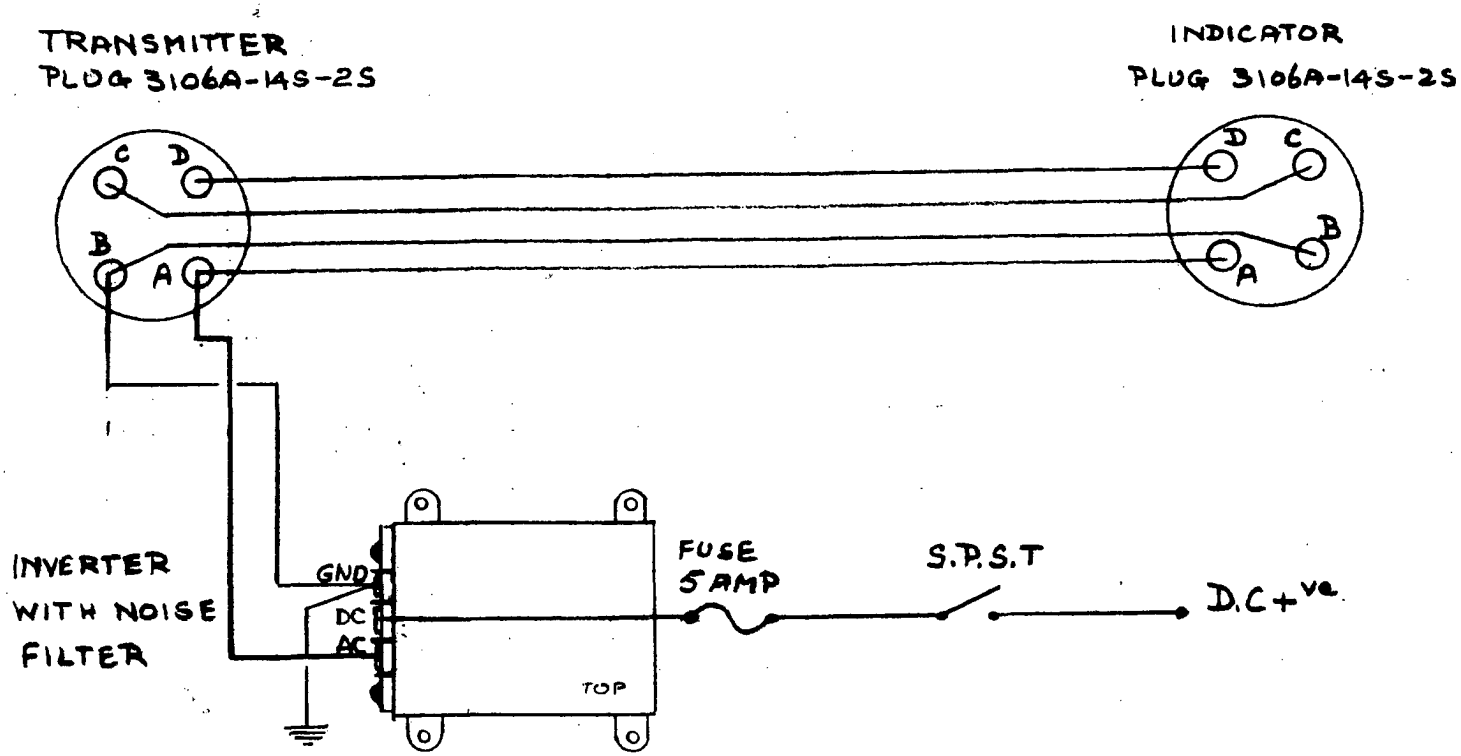

COMPENSATION

For correct compensation the following precautions must be taken:-

1. Select a location for swinging the ship which is free from artificial disturbances, e,g.,power lines, pipes, steel structures, etc.

2. Raise the tail of the aircraft to normal cruising attitude.

EA-25 20040 7848 GJB

US Department of Transportation
Federal Aviation Administration

MAJOR REPAIR AND ALTERATION
(Airframe, Powerplant, Propeller, or Appliance)

Form Approved
OMB No. 2120-0020

For FAA Use Only
Office Identification
FS00 AEA-25-TEB

INSTRUCTIONS: Print or type all entries. See FAR 43.9, FAR 43 Appendix B, and AC 43.9-1 (or subsequent revision thereof) for instructions and disposition of this form. This report is required by law (49 U.S.C. 1421). Failure to report can result in civil penalty not to exceed $1,000 for each such violation (Section 901 Federal Aviation Act of 1958).

1. Aircraft	Make: Mooney	Model: M20C
	Serial No.: 3372	Nationality and Registration Mark: N953MA
2. Owner	Name *(As shown on registration certificate)*: Michael R. Coren	Address *(As shown on registration certificate)*: Box 338, Central Valley, NY 10917

3. For FAA Use Only

4. Unit Identification / **5. Type**

Unit	Make	Model	Serial No.	Repair	Alteration
AIRFRAME	*(As described in Item 1 above)*				X
POWERPLANT					
PROPELLER					
APPLIANCE	Type				
	Manufacturer				

6. Conformity Statement

A. Agency's Name and Address	B. Kind of Agency	C. Certificate No.
Edelmiro Cruz Hernandez 25 Prospect Hill Road Cuddebackville, NY 12729	X U.S. Certificated Mechanic Foreign Certificated Mechanic Certificated Repair Station Manufacturer	1466324

D. I certify that the repair and/or alteration made to the unit(s) identified in item 4 above and described on the reverse or attachments hereto have been made in accordance with the requirements of Part 43 of the U.S. Federal Aviation Regulations and that the information furnished herein is true and correct to the best of my knowledge.

Date	Signature of Authorized Individual
June 01, 2004	Edelmiro Cruz Hernandez

7. Approval for Return To Service

Pursuant to the authority given persons specified below, the unit identified in item 4 was inspected in the manner prescribed by the Administrator of the Federal Aviation Administration and is ☒ APPROVED ☐ REJECTED

BY							Other *(Specify)*
		FAA Flt. Standards Inspector		Manufacturer	X	Inspection Authorization	
		FAA Designee		Repair Station		Person Approved by Transport Canada Airworthiness Group	

Date of Approval or Rejection	Certificate or Designation No.	Signature of Authorized Individual
June 01, 2004	1466324	Edelmiro Cruz Hernandez

FAA Form 337 (12-88)

NOTICE

Weight and balance or operating limitation changes shall be entered in the appropriate aircraft record. An alteration must be compatible with all previous alterations to assure continued conformity with the applicable airworthiness requirements.

8. Description of Work Accomplished
(If more space is required, attach additional sheets. Identify with aircraft nationality and registration mark and date work completed.)

953MA Mooney M20C S/N 3372 Tach: 4430 Hours TTAF4430 Date: June 1, 2004

1. Installation of Alcor single cylinder EGT model number 46150 kit number 211-110-0 by persons unknown.
2. This kit is approved for installation in accordance with Alcor Inc. STC SA5222SW
3. STC SA522SW issued to Alcor Inc. dated May 26,1965, amended April 30, 1992 rev.15
4. Installation inspected and meets requirements in accordance with Alcor Master Drawing List for STC SA5225SW dated November 14, 1984.
5. Indicator installed at instrument panel and probe installed at Number 3 cylinder exhaust pipe.
6. This installation has no effect on any other equipment installed.
7. No flight manual supplement required.
8. Weight & balance updated to reflect this installation.
9. Logbook entries were made reflecting this installation.
10. A copy of STC has been added to the permanent records of this aircraft.
11. Instructions for continued airworthiness will be found in the equipment manufacturer's maintenance manual and incorporated into the current aircraft inspection program. Otherwise the scope and detail of FAR 43 Appendix D will apply.

☒ Additional Sheets Are Attached

United States Of America

Department of Transportation - Federal Aviation Administration

Supplemental Type Certificate

Number SA522SW

This Certificate issued to Alcor, Inc.
300 Breesport St.
San Antonio, TX 78216

certifies that the change in the type design for the following product with the limitations and conditions therefor as specified hereon meets the airworthiness requirements of Part 23 of the Federal Aviation Regulations. Parts 3, 4a, 4b of the Civil Air Regulations

Original Product Type Certificate Number: See Limitations and Conditions

Make: See Limitations and Conditions

Model: See Limitations and Conditions

Description of Type Design Change:
Installation of Exhaust Gas Temperature (EGT), Cylinder Head temperature CHT) Components/Systems in accordance with Master Drawing List titled "Alcor Master Drawing List for STC SA522SW dated November 14, 1984," or later FAA approved revisions.

Limitations and Conditions:
All aircraft equipped with reciprocating engines are eligibile for the installation of the Alcor EGT and CHT Component/Systems.

Compatibility of this modification with previously installed equipment must be determined by installer. If the holder agrees to permit another person to use this certificate to alter the product, the holder shall give the other person written evidence of that permission.

This certificate and the supporting data which is the basis for approval shall remain in effect until surrendered, suspended, revoked or a termination date is otherwise established by the Administrator of the Federal Aviation Administration.

Date of application: April 15, 1965

Date of issuance: May 26, 1965

Date reissued: 07/05/94; 9/30/02

Date amended: April 30, 1992 Rev. 15

By direction of the Administrator

(Signature)

S. Frances Cox, Manager
Special Certification Office,
Southwest Region

(Title)

Any alteration of this certificate is punishable by a fine of not exceeding $1,000, or imprisonment not exceeding 3 years, or both.

This certificate may be transferred in accordance with FAR 21.47

EA25 20040 7848 GJB

US Department of Transportation
Federal Aviation Administration

MAJOR REPAIR AND ALTERATION
(Airframe, Powerplant, Propeller, or Appliance)

Form Approved
OMB No. 2120-0020

For FAA Use Only
Office Identification
FS00 AEA-25-JEB

INSTRUCTIONS: Print or type all entries. See FAR 43.9, FAR 43 Appendix B, and AC 43.9-1 (or subsequent revision thereof) for instructions and disposition of this form. This report is required by law (49 U.S.C. 1421). Failure to report can result in civil penalty not to exceed $1,000 for each such violation (Section 901 Federal Aviation Act of 1958).

1. Aircraft	Make: Mooney	Model: M20C
	Serial No.: 3372	Nationality and Registration Mark: N953MA
2. Owner	Name *(As shown on registration certificate)*: Michael R. Coren	Address *(As shown on registration certificate)*: Box 338, Central Valley, NY 10917

3. For FAA Use Only

4. Unit Identification / **5. Type**

Unit	Make	Model	Serial No.	Repair	Alteration
AIRFRAME	*(As described in Item 1 above)*				X
POWERPLANT					
PROPELLER					
APPLIANCE	Type / Manufacturer				

6. Conformity Statement

A. Agency's Name and Address	B. Kind of Agency	C. Certificate No.
Edelmiro Cruz Hernandez 25 Prospect Hill Road Cuddebackville, NY 12729	X U.S. Certificated Mechanic Foreign Certificated Mechanic Certificated Repair Station Manufacturer	1466324

D. I certify that the repair and/or alteration made to the unit(s) identified in item 4 above and described on the reverse or attachments hereto have been made in accordance with the requirements of Part 43 of the U.S. Federal Aviation Regulations and that the information furnished herein is true and correct to the best of my knowledge.

Date	Signature of Authorized Individual
June 01, 2004	Edelmiro Cruz Hernandez

7. Approval for Return To Service

Pursuant to the authority given persons specified below, the unit identified in item 4 was inspected in the manner prescribed by the Administrator of the Federal Aviation Administration and is ☒ APPROVED ☐ REJECTED

BY							Other *(Specify)*
		FAA Flt. Standards Inspector		Manufacturer	X	Inspection Authorization	
		FAA Designee		Repair Station		Person Approved by Transport Canada Airworthiness Group	

Date of Approval or Rejection	Certificate or Designation No.	Signature of Authorized Individual
June 01, 2004	1466324	Edelmiro Cruz Hernandez Edelmiro Cruz Hernandez

FAA Form 337 (12-88)

NOTICE

Weight and balance or operating limitation changes shall be entered in the appropriate aircraft record. An alteration must be compatible with all previous alterations to assure continued conformity with the applicable airworthiness requirements.

8. Description of Work Accomplished
(If more space is required, attach additional sheets. Identify with aircraft nationality and registration mark and date work completed.)

953MA Mooney M20C S/N 3372 Tach: 4430 Hours TTAF4430 Date: June 1, 2004

1. Relocated Cleveland wheel brake assembly in accordance with Lasar Speed Mod STC #SA4443NM.
2. STC #SA4443NM was issued to Lasar Speed Mod July 9, 1982 with no amendments.
3. Installed in accordance with STC #SA4443NM and Lasar Drawing List Report 103B dated November 23, 1981.
4. No flight manual supplement required.
5. The weight and balance was not changed.
6. Log book entries were made reflecting this installation.
7. A copy of STC #SA4443NM and applicable model list have been added to the permanent records of this aircraft.
8. Instructions for continued airworthiness will be found in the equipment manufacturer's maintenance manual and incorporated into the current aircraft inspection program. Otherwise the scope and detail of FAR 43 Appendix D will apply.

----------END----------

☒ Additional Sheets Are Attached

United States of America

Department of Transportation — Federal Aviation Administration

Supplemental Type Certificate

Number SA4443NM

This certificate issued to Paul E. Loewen

certifies that the change in the type design for the following product with the limitations and conditions thereto as specified hereon meets the airworthiness requirements of Part 3 of the Civil Air Regulations effective Nov 1, 1949, as amended to May 18, 1954.

Original Product — Type Certificate Number: 2A3

Make: Mooney

Model: M20B, M20C, M20D, M20E, M20F, M20G, M20J, M20K

Description of Type Design Change: Installation of gap seals and speed fairings in accordance with the FAA sealed reports listed on page 3 dated as shown or later FAA approved revision.

Limitations and Conditions: The approval of this change in type design applies to the basic aircraft of the specified models that are otherwise unmodified. This approval should not be extended to other aircraft ofthese models on which other previously approved modifications are incorporated unless it is determined by the installer that the interrelationship between this change and any of those other previously approved modifications will introduce no adverse effect upon the airworthiness of that aircraft.

This certificate and the supporting data which is the basis for approval shall remain in effect until surrendered, suspended, revoked, or a termination date is otherwise established by the Administrator of the Federal Aviation Administration.

Date of application: November 26, 1981 Date reissued:

Date of issuance: July 9, 1982 Date amended:

By direction of the Administrator

Lyle C. Davis
(Signature)

acting Chief, Aircraft Modification Section
(Title)

Any alteration of this certificate is punishable by a fine of not exceeding $1,000, or imprisonment not exceeding 3 years, or both.

This certificate may be transferred in accordance with FAR 21.47.

FAA Form 8110-2 (10-65)

Report	Date	Title
103	11-23-81	Wheel well Liners and Brake Rotation

LASAR NOTE: KIT # 103B - AUTHORIZATION FOR THE APPLICATION OF THIS MODIFICATION IS GIVEN ONLY FOR USE ON THE SPECIFIC AIRPLANE DESCRIBED AS FOLLOWS:

INSTALLED ON: 66-C **MOONEY N** 953MA **S/N** 3372

Special Notes: Michael R Coren

(I.) 7-9-82

Supplemental Type Certificate

(Continuation Sheet)

Number SA4443NM

Description of Type Design Change (Continued)

Report	Date	Title
100	5-10-81	Flap Gap Seals
101	5-10-81	Aileron Lower Gap Seals
102	5-10-81	Flap Hinge Covers
103	11-23-81	Wheel Well Liners and Brake Rotation
104	3-01-82	Dorsal Fin Fairings
105	11-23-81	Tail Root Fairing - Horizontal
107	3-01-82	Wing Tip Fairings
108	3-01-82	Wing Root Leading Edge Fairing
111	11-23-81	Inboard Flap Bracket Fairing
112	3-01-82	Rudder and Elevator Hinge Covers

The above reports may be installed separately or in any combination.

- END -

Lake Aero Styling and Repair
4725 Highland Springs Rd
Lakeport CA 95453-9775
707-263-0412, FAX 263-0420

INSTRUCTIONS FOR CONTINUED AIRWORTHINESS

At **ANNUAL** intervals:

Mooney Aircraft M20 Series; STC SA4443NM, Kits 100, 101, 103A, 112 (Sheetmetal).
1. Check for security of all fasteners, replace as required.
2. Check general condition, cracks, corrosion, and mounting. Utilize Mooney Service Manual for repairs.

Mooney Aircraft M20 Series; STC SA4443/3263/4202/3252/4535NM, Kits 104, 107, 108, 119, 120, 129, 131 (Windshields and fiberglass).
1. Check for security of all fasteners, replace as required. Caution on torque of screws.
2. Check for general condition, cracks, mounting, corrosion. Replace windshields when cracked, crazed, sealant deterioration.
3. Fiberglass-check for delimitation, separation and/or exposed fibers.
4. Utilize Mooney Service Manual for instructions in determining condition when replacement due.
5. Contact Lake Aero Styling for repair instructions, when needed.

Mooney Aircraft M20 Series; STC SA4443/2513/5480/4502/2711NM, Kits 103B, 126, 127, 138 (Brake rotation, oil cooler relocation, engine replacement, flashing light module).
1. Utilize Mooney Service Manual for further inspection and repair.
2. Inspect for frayed insulation on wires. Replace if damaged.
3. Use additional Ty-Rap®'s, as necessary.
4. Check general condition of hoses, clamps, security, and fasteners/fittings.

All items of FAR 43 Appendix D, are applicable.

Orig., 7 DEC 2000

US Department of Transportation
Federal Aviation Administration

MAJOR REPAIR AND ALTERATION
(Airframe, Powerplant, Propeller, or Appliance)

Form Approved
OMB No. 2120-0020

For FAA Use Only

Office Identification AEA-FSDO-25

INSTRUCTIONS: Print or type all entries. See FAR 43.9, FAR 43 Appendix B, and AC 43.9-1 (or subsequent revision thereof) for instructions and disposition of this form. This report is required by law (49 U.S.C. 1421). Failure to report can result in civil penalty not to exceed $1,000 for each such violation (Section 901 Federal Aviation Act of 1958).

1. Aircraft	Make: MOONEY	Model: M 20C
	Serial No.: 3372	Nationality and Registration Mark: N953MA
2. Owner	Name *(As shown on registration certificate)*: MICHAEL COREN	Address *(As shown on registration certificate)*: BOX 338 CENTRAL VALLEY NY 10917

3. For FAA Use Only

4. Unit Identification				5. Type	
Unit	Make	Model	Serial No.	Repair	Alteration
AIRFRAME	*(As described in Item 1 above)*				X
POWERPLANT					
PROPELLER					
APPLIANCE	Type				
	Manufacturer				

6. Conformity Statement

A. Agency's Name and Address	B. Kind of Agency	C. Certificate No.
Edelmiro Cruz Hernandez 25 Prospect Hill Road Cuddebackville N.Y. 12729	X U.S. Certificated Mechanic Foreign Certificated Mechanic Certificated Repair Station Manufacturer	1466324

D. I certify that the repair and/or alteration made to the unit(s) identified in item 4 above and described on the reverse or attachments hereto have been made in accordance with the requirements of Part 43 of the U.S. Federal Aviation Regulations and that the information furnished herein is true and correct to the best of my knowledge.

Date	Signature of Authorized Individual
May 29,2001	Edelmiro Cruz Hernandez

7. Approval for Return To Service

Pursuant to the authority given persons specified below, the unit identified in item 4 was inspected in the manner prescribed by the Administrator of the Federal Aviation Administration and is ☒ APPROVED ☐ REJECTED

BY							Other *(Specify)*
		FAA Flt. Standards Inspector		Manufacturer	X	Inspection Authorization	
		FAA Designee		Repair Station		Person Approved by Transport Canada Airworthiness Group	

Date of Approval or Rejection	Certificate or Designation No.	Signature of Authorized Individual
May 29, 2001	1466324	Edelmiro Cruz Hernandez

FAA Form 337 (12-88)

NOTICE

Weight and balance or operating limitation changes shall be entered in the appropriate aircraft record. An alteration must be compatible with all previous alterations to assure continued conformity with the applicable airworthiness requirements.

8. Description of Work Accomplished
(If more space is required, attach additional sheets. Identify with aircraft nationality and registration mark and date work completed.)

Mooney M20C S/N 3372 N953MA T/T TacH 4268. HRS. May 29 2001

1Installed a Remote Mounted AirWolf Engine Oil Filter Kit AFC-K007 at upper right hand foward side of firewall using two p/n F13000008-0XX7 TITE FLEX firesleeved teflon hoses.

2) This istallation is approuved for installation in accordence with STC SA00024NY.

3) STC SA00024NY issued to AIRWOLF FILTER CORP. July 22, 1993 last amended May 23, 1997.

4) Installation In accordance with installation instruction no. AFC-K007-A-11 dated June 8, 1993 amended November 1, 1995.

5) This system has no obvious effects on other aircraft systems.

6) No manual supplement required for this installation.

7) Weight and Balance revised, equipment list updated.

8) Log Book entries were made reflecting this installation.

9) A copy of this STC. and AML. has been added to the permanent records of this aircraft.

10) Instructions for continued airworthiness will be found in the installed equipment manufactuers maintenance instructions no. AFC-K007-M1 and incorporated into the current ispection program. Otherwise , the scope and detail of FAR> 43, Appendix D will apply.

----------END----------

☒ Additional Sheets Are Attached

Department of Transportation — Federal Aviation Administration

Supplemental Type Certificate

Number SA00024NY

This certificate, issued to Airwolf Filter Corp.
15369 Madison Road
Middlefield, Ohio 44062

certifies that the change in the type design for the following product with the limitations and conditions therefor as specified hereon meets the airworthiness requirements of Part 3/23 *of the* Civil Air/Federal Aviation *Regulations.*

Original Product — Type Certificate Number: *(See attached FAA Approved Model List
Make: *(AML) No. SA00024NY for list of approved
Model: *airplane models and applicable installation
*instructions)

Description of Type Design Change:
Installation of Airwolf remote mounted engine oil filter kit AFC-K007 on single and multi engine fixed wing light aircraft incorporating Lycoming reciprocating engines of 450 horsepower or less.

AEA-FSDO-25

Limitations and Conditions:
1) Engine compartment firewall for mounting oil filter shall be of .021 inch minimum thickness ASTM A527 galvanized steel or equivalent (Ref. CAR 3.624 (b), FAR 23.1191(h).

2) Airwolf Maintenance Instructions AFC-K007-MI dated March 30, 1993 are required with this installation.
(See STC Continuation Sheet, Page 2)

This certificate and the supporting data which is the basis for approval shall remain in effect until surrendered, suspended, revoked, or a termination date is otherwise established by the Administrator of the Federal Aviation Administration.

Date of application: June 8, 1993

Date of issuance: July 22, 1993

Date reissued:

Date amended. 11/11/93, 2/3/94, 5/12/94, 11/22/94
5/25/95, 2/5/96, 5/23/97

By direction of the Administrator

Anthony Socias *(Signature)*
Manager, Airframe and Propulsion Branch
New York Aircraft Certification Office

(Title)

Any alteration of this certificate is punishable by a fine of not exceeding $1,000, or imprisonment not exceeding 3 years, or both.

This certificate may be transferred in accordance with FAR 21.47.

FAA Form 8110-2 (10-68)

APPROVED MODEL LIST (AML) SUPPLEMENTARY
AIRWOLF FILTER CORP.
FOR
INSTALLATION OF REMOTE MOUNT OIL FILTER

Original Issue Date July 22, 1993

Item	Aircraft Make	Aircraft Model	Original Type Certificate No.	Installation Instructions	AML Amendment Date
1	Pitts (AVIAT Inc.)	S-1S, S-1T, S-2, S-2A, S-2S, & S-2B with AEIO-360 or AEIO-540 series engines	A8SO	Airwolf Filter Corp. Remote Mount Oil Filter kit AFC-K007-II, Dated June 8, 1993	N/A
2	Mooney	M20, M20 A, M20B, M20C, M20D, M20E, M20F, M20G, M20J, M20M	2A3	Airwolf Filter Corp. Remote Mounted Oil Filter Kit AFC-K007-II, Dated June 8, 1993	11/4/93
3	American Champion Aircraft Corp.	Bellanca (Champion) 8KCAB, 8GCBC	A21CE	Airwolf Filter Corp. Remote Mounted Oil Filter Kit AFC-K007-II, Dated June 8, 1993	11/4/93
4	Beech	19A,B19,M19A,23,A23A A23-19, A23-24,B23,C23, A24,A24R,B24R,C24R,B95, D95, D95A	A1CE	Airwolf Filter Corp. Remote Mounted Oil Filter Kit AFC-K007-II, Dated June 8, 1993	11/22/94
5	Cessna	177	A13CE	Airwolf Filter Corp. Remote Mounted Oil Filter Kit AFC-K007-II, Dated June 8, 1993	2/3/94

AEA-FSDO-25

ORIGINAL SIGNED BY:
FAA Approved: ANTHONY SOCIAS
Anthony Socias
Manager, Airframe and Propulsion Branch
New York Aircraft Certification Office

Amended: November 22, 1994

FAA AIRCRAFT REGISTRY
CAMERA NO. IN DATE: 2-29-96

IWM

U.S. DEPARTMENT OF TRANSPORTATION
FEDERAL AVIATION ADMINISTRATION

MAJOR REPAIR AND ALTERATION
(Airframe, Powerplant, Propeller, or Appliance)

Form Approved
Budget Bureau No. 04-R060.1

FOR FAA USE ONLY

OFFICE IDENTIFICATION: AEA-FSDO-25

INSTRUCTIONS: Print or type all entries. See FAR 43.9, FAR 43 Appendix B, and AC 43.9-1 (or subsequent revision thereof) for instructions and disposition of this form.

1. AIRCRAFT	MAKE: Mooney	MODEL: M20C
	SERIAL NO.: 3372	NATIONALITY AND REGISTRATION MARK: N953MA
2. OWNER	NAME (As shown on registration certificate): Coren, Michael	ADDRESS (As shown on registration certificate): Box 338 Central Valley N.Y. 10917

3. FOR FAA USE ONLY

4. UNIT IDENTIFICATION / 5. TYPE

UNIT	MAKE	MODEL	SERIAL NO.	REPAIR	ALTERATION
AIRFRAME	(As described in item 1 above)				X X
POWERPLANT					
PROPELLER					
APPLIANCE	TYPE / MANUFACTURER				

6. CONFORMITY STATEMENT

A. AGENCY'S NAME AND ADDRESS	B. KIND OF AGENCY	C. CERTIFICATE NO.
Robert M. Ripchick 720 Homestead Ave. May Brook, N.Y. 12543	X U.S. CERTIFICATED MECHANIC FOREIGN CERTIFICATED MECHANIC CERTIFICATED REPAIR STATION MANUFACTURER	90642635 A&P

D. I certify that the repair and/or alteration made to the unit(s) identified in item 4 above and described on the reverse or attachments hereto have been made in accordance with the requirements of Part 43 of the U.S. Federal Aviation Regulations and that the information furnished herein is true and correct to the best of my knowledge.

DATE	SIGNATURE OF AUTHORIZED INDIVIDUAL
1/11/96	Robert M. Ripchick

7. APPROVAL FOR RETURN TO SERVICE

Pursuant to the authority given persons specified below, the unit identified in item 4 was inspected in the manner prescribed by the Administrator of the Federal Aviation Administration and is ☒ APPROVED ☐ REJECTED

BY						
	FAA FLT. STANDARDS INSPECTOR		MANUFACTURER	X	INSPECTION AUTHORIZATION	OTHER (Specify)
	FAA DESIGNEE		REPAIR STATION		CANADIAN DEPARTMENT OF TRANSPORT INSPECTOR OF AIRCRAFT	

DATE OF APPROVAL OR REJECTION	CERTIFICATE OR DESIGNATION NO.	SIGNATURE OF AUTHORIZED INDIVIDUAL
JAN 11, 1996	IA146632#	Edelmiro Cruz Hernandez

FAA Form 337 (7-67) (8320).

FAA AIRCRAFT REGISTRY
CAMERA NO. IN DATE: 2-29-96

NOTICE

Weight and balance or operating limitation changes shall be entered in the appropriate aircraft record. An alteration must be compatible with all previous alterations to assure continued conformity with the applicable airworthiness requirements.

8. DESCRIPTION OF WORK ACCOMPLISHED *(If more space is required, attach additional sheets. Identify with aircraft nationality and registration mark and date work completed.)*

Date: January 11, 1996

N953MA
Serial #: 3372
Aircraft total time: 4115

Resealed both L/H & R/H aircraft fuel tanks in accordance with STC#: SA3145SO and associated installation instructions.

Inspected cowl closure fairing previouslsly installed by persons unkown. Installation found to conform to manufacturers installation instructions & STC#: SA4535NM.

Inspected nose gear truss replacement bushing previouslsly installed by persons unkown. Installation found to conform to manufacturers installation instructions & STC#: SA3540NM.

Aircraft weighed 5/95 with above equipment installed. Current weight & balance is correct.

Appropriate log entries have been completed.

**********END**********

☐ ADDITIONAL SHEETS ARE ATTACHED

U.S. GPO 1981 - 775-332/47

FAA AIRCRAFT REGISTRY
CAMERA NO. 2 DATE: 8-14-90

DEPARTMENT OF TRANSPORTATION
FEDERAL AVIATION ADMINISTRATION

MAJOR REPAIR AND ALTERATION
(Airframe, Powerplant, Propeller, or Appliance)

Form Approved
Budget Bureau No. 04-R060.1

FOR FAA USE ONLY
OFFICE IDENTIFICATION
NEA-FSDO-61

INSTRUCTIONS: Print or type all entries. See FAR 43.9, FAR 43 Appendix B, and AC 43.9-1 (or subsequent revision thereof) for instructions and disposition of this form.

1. AIRCRAFT	MAKE: Mooney	MODEL: M20C
	SERIAL NO.: # 3372	NATIONALITY AND REGISTRATION MARK: # N953MA
2. OWNER	NAME (As shown on registration certificate): Mike Coren	ADDRESS (As shown on registration certificate): Box # 338 Centeral Valley N.Y. 10917

3. FOR FAA USE ONLY

4. UNIT IDENTIFICATION / **5. TYPE**

UNIT	MAKE	MODEL	SERIAL NO.	REPAIR	ALTERATION
AIRFRAME	(As described in item 1 above)				XX
POWERPLANT	N/A	N/A	N/A		
PROPELLER	N/A	N/A	N/A		
APPLIANCE	TYPE: N/A MANUFACTURER: N/A	N/A	N/A		

6. CONFORMITY STATEMENT

A. AGENCY'S NAME AND ADDRESS	B. KIND OF AGENCY	C. CERTIFICATE NO.
John Neary Jr. 539 Victory Ave. Ridgefield N.J. 07657	[X] U.S. CERTIFICATED MECHANIC [ ] FOREIGN CERTIFICATED MECHANIC [ ] CERTIFICATED REPAIR STATION [ ] MANUFACTURER	(IA) # 156523327

D. I certify that the repair and/or alteration made to the unit(s) identified in item 4 above and described on the reverse or attachments hereto have been made in accordance with the requirements of Part 43 of the U.S. Federal Aviation Regulations and that the information furnished herein is true and correct to the best of my knowledge.

DATE	SIGNATURE OF AUTHORIZED INDIVIDUAL
12/31/84	John Neary Jr.

7. APPROVAL FOR RETURN TO SERVICE

Pursuant to the authority given persons specified below, the unit identified in item 4 was inspected in the manner prescribed by the Administrator of the Federal Aviation Administration and is [X] APPROVED [ ] REJECTED

BY						
	[ ] FAA FLT. STANDARDS INSPECTOR	[ ] MANUFACTURER	[X] INSPECTION AUTHORIZATION	OTHER (Specify)		
	[ ] FAA DESIGNEE	[ ] REPAIR STATION	[ ] CANADIAN DEPARTMENT OF TRANSPORT INSPECTOR OF AIRCRAFT			

DATE OF APPROVAL OR REJECTION	CERTIFICATE OR DESIGNATION NO.	SIGNATURE OF AUTHORIZED INDIVIDUAL
12/31/84	(IA)156523327	John Neary Jr.

FAA AIRCRAFT REGISTRY
CAMERA NO. 2 DATE: 8-14-90

NOTICE

Weight and balance or operating limitation changes shall be entered in the appropriate aircraft record. An alteration must be compatible with all previous alterations to assure continued conformity with the applicable airworthiness requirements.

8. DESCRIPTION OF WORK ACCOMPLISHED *(If more space is required, attach additional sheets. Identify with aircraft nationality and registration mark and date work completed.)*

Alteration:

1.) Installed tail root fairing (horizontal) with approved parts listed:
L014-350204-003 fairing tailroot l/H.
L015-350204-003 fairing tailroot R/H.
qty.(2) Seals (no part no. given).
qty.(94) 42H-4-4 USM Blind Rivets.

2.) Installed in accordance with S.T.C. # SA4443NM, and instructions provided on Lake Aero Styling and Repair Drawing List Report # 105.

3.) Installed flap gap seals with approved parts listed:
C-L002-210374-001 flap seal L/H. imboard.
C-L002-210374-002 flap seal R/H. imboard.
qty.(2) # C-L 002-210374-003 flap seal L/H.
qty.(2) # C-L 002-210374-004 flap seal R/H.
qty.(2) # C-L 001-210375-001 channel.
qty.(4) # C-L 001-210375-003 channel.
qty.(256) # AD42-H USM Blind Rivets.
qty.(22) # CR3243-4-1 Cherry Max Blind Rivets.

4.) Installed in accordance with S.T.C. # SA4443NM and instructions provided on Lake Aero Styling and Repair Drawing List Report # 100.

5.) Weight & Balance Change:
+2.5# @ + 177" 443, Moment (Tailroot Fairing).
+3.5# @ + 90" 274.5 Moment (Flap Gap Seals).
New Empty Weight - 1,603#.
E.W.C.G. - +45.03".
Useful Load 972#.

Weight and balance based on previous Form # 337 dated 5/10/73.

All work done in accordance with S.T.C. instructions, EA-AC 43.13 - 1A & 2A, and current Federal Aviation Regulations.

E N D

☐ ADDITIONAL SHEETS ARE ATTACHED

FAA AIRCRAFT REGISTRY
CAMERA NO. 5N DATE: 2/11/82

940

Verified by Operator #6
1058 933

APR 20 1966

Form Approved.
Budget Bureau No. 04-R058.2

FEDERAL AVIATION AGENCY

APPLICATION FOR AIRWORTHINESS CERTIFICATE

(FAR 21)

INSTRUCTIONS: Print or type. Do not write in shaded areas; these are for FAA use only. Submit original only to an authorized FAA Representative. If additional space is required, use reverse side.

I. AIRCRAFT DESCRIPTION

1. REGISTRATION MARK	2. AIRCRAFT MAKE	3. AIRCRAFT MODEL DESIGNATION	FAA CODING
N953MA	Mooney	M-20C	5870208
4. AIRCRAFT SERIAL NO.	5. ENGINE MAKE	6. ENGINE MODEL DESIGNATION	
3372	Lycoming	O-360-A1D	4514
7. NO. OF ENGINES	8. PROPELLER MAKE	9. PROPELLER MODEL DESIGNATION	10. YR. AIRC. MANUFACTURED
One	Hartzell	HC-C2YK-1B/7666A-2	1966

II. CERTIFICATION REQUESTED

A. APPLICATION IS HEREBY MADE FOR:

3	X	ORIGINAL CERTIFICATE—AIRCRAFT IS	X	NEW		USED		IMPORT
4		AMENDMENT OR MODIFICATION OF CURRENT CERTIFICATE						
5		OTHER (Specify)						

B. AIRWORTHINESS CLASSIFICATION (For multiple certification, check appropriate items)

1	X	STANDARD (Indicate category)	X	NORMAL		UTILITY		ACROBATIC		TRANSPORT		
2		LIMITED										
3		RESTRICTED (Indicate operation(s) to be conducted)	1	AGRICULTURE & PEST CONTROL	2		AERIAL SURVEYING	3		AERIAL ADVERTISING		
			4	FOREST (Wild life conservation)	5		PATROLLING	6		WEATHER CONTROL		
			0	OTHER (Specify)								
4		EXPERIMENTAL (Indicate operation(s) to be conducted)	1	RESEARCH AND DEVELOPMENT	2		AMATEUR BUILT	3		EXHIBITION		
			4	RACING	0		TO SHOW COMPLIANCE WITH FAR					
5		PROVISIONAL (Indicate class)	1	CLASS I	2		CLASS II			FAA CODING		

III. OWNER'S CERTIFICATION

A. REGISTERED OWNER (As shown on Certificate of Aircraft Registration) IF DEALER CHECK HERE → X

NAME	ADDRESS (Number, street, city, State and ZIP code)
Mooney Aircraft, Inc.	Box 72; Kerrville, Texas 78028

B. AIRCRAFT CERTIFICATION BASIS

X	AIRCRAFT SPECIFICATION OR TYPE CERTIFICATION DATA SHEET (Give No. and Rev. No.) 2A3 Rev. 11		AIRWORTHINESS DIRECTIVE SUMMARY (Give year and last card No.)
	AIRCRAFT LISTING (Give page No(s.))		SUPPLEMENTAL TYPE CERTIFICATE (Give No(s.))

C. AIRCRAFT OPERATION AND MAINTENANCE RECORDS

X	AIRCRAFT NEW—NO PREVIOUS HISTORY	TOTAL AIRFRAME HOURS RECORDED	FAA CODING
	RECORDS MAINTAINED IN COMPLIANCE WITH FAR 91.173		

I hereby certify that I am the registered owner (or his agent) of the aircraft described above; that the aircraft is registered with the Federal Aviation Agency in accordance with section 501 of the Federal Aviation Act of 1958, and applicable Federal Aviation Regulations; and that the aircraft has been inspected and is airworthy and eligible for the classification(s) requested.

DATE OF APPLICATION	NAME AND TITLE (Print or type)	SIGNATURE
4-6-66	E.B. Hunnicutt (Treasurer)	E.B. Hunnicutt

IV. INSPECTION AGENCY VERIFICATION

IN ACCORDANCE WITH FAR 21.183, THE AIRCRAFT DESCRIBED ABOVE HAS BEEN INSPECTED AND FOUND AIRWORTHY BY:

2	CERTIFICATED AIR CARRIER (Give Certificate No.)	3	CERTIFICATED MECHANIC (IA) (Give Certificate No.)	6	CERTIFICATED DOMESTIC REPAIR STATION (Give Certificate No.)
5	AIRCRAFT MANUFACTURER (Give name of firm)				FAA CODING 1

DATE	TITLE	SIGNATURE

V. AIRWORTHINESS DOCUMENTATION

	A. CURRENT OPERATING LIMITATIONS AVAILABLE IN AIRCRAFT	X	G. THIS INSPECTION RECORDED IN AIRCRAFT RECORDS
	B. CURRENT OPERATING LIMITATIONS ATTACHED		H. STATEMENT OF CONFORMITY, FAA FORM 317 (Attach when required)
	C. CURRENT APPROVED FLIGHT MANUAL AVAILABLE IN AIRCRAFT		I. PREVIOUS AIRWORTHINESS CERTIFICATE ISSUED IN ACCORDANCE WITH FAR ____ CAR ____ (Orig. attached)
	D. DATA, DRAWINGS, PHOTOGRAPHS, ETC. (Attach when required)		
X	E. CURRENT WEIGHT & BALANCE INFORMATION AVAILABLE IN AIRCRAFT	X	J. AIRWORTHINESS CERTIFICATE ISSUED IN ACCORDANCE WITH FAR 21.183(a) (Copy attached)
	F. MAJOR REPAIR AND ALTERATION, FAA FORM 337 (Attach when req.)		

VI. FAA REPRESENTATIVE CERTIFICATION

X	A. I have inspected the aircraft described above, find it conforms to its type certificate, and is in condition for safe operation.
	B. I have inspected the aircraft described above, find it is in condition for safe experimental operation.
	C. Current Airworthiness Certificate amended.

DATE	DESIGNATION NO.	OFFICE NO.	SIGNATURE
4-6-66	DOA SW-1	SW-EMDO-43	Mooney Aircraft, Inc. DOA SW-1 By: Gilbert R. Gerstenberg

FAA Form 305 (6-65) OBSOLETE PREVIOUS EDITION ☆ GPO : 1965 OF—780-702 0052-024-7000 (8130)

FAA AIRCRAFT REGISTRY
CAMERA NO. 5N DATE: 2/11/82

MICRO

FAA AIRCRAFT REGISTRY
CAMERA NO. 5N DATE: 2/11/82

UNITED STATES OF AMERICA — FEDERAL AVIATION AGENCY

STANDARD AIRWORTHINESS CERTIFICATE

1. NATIONALITY AND REGISTRATION MARKS	2. MANUFACTURER AND MODEL	3. AIRCRAFT SERIAL NUMBER	4. CATEGORY
N953MA	Mooney M-20C	3372	Normal

5. AUTHORITY AND BASIS FOR ISSUANCE
This airworthiness certificate is issued pursuant to the Federal Aviation Act of 1958 and certifies that, as of the date of issuance, the aircraft to which issued has been inspected and found to conform to the type certificate therefor, to be in condition for safe operation, and has been shown to meet the requirements of the applicable comprehensive and detailed airworthiness code as provided by Annex 8 to the Convention on International Civil Aviation, except as noted herein.
Exceptions:

None

6. TERMS AND CONDITIONS
Unless sooner surrendered, suspended, revoked, or a termination date is otherwise established by the Administrator, this airworthiness certificate is effective as long as the maintenance, preventative maintenance, and alterations are performed in accordance with Parts 21, 43, and 91 of the Federal Aviation Regulations, as appropriate, and the aircraft is registered in the United States.

DATE OF ISSUANCE	FAA REPRESENTATIVE	DESIGNATION NUMBER
4-6-56	By: [illegible] Mooney Aircraft, Inc. SW-1	DOA SW-1

Any alteration, reproduction, or misuse of this certificate may be punishable by a fine not exceeding $1,000, or imprisonment not exceeding 3 years, or both. THIS CERTIFICATE MUST BE DISPLAYED IN THE AIRCRAFT IN ACCORDANCE WITH APPLICABLE FEDERAL AVIATION REGULATIONS.

FAA Form 1362 (7-65) 0052-040-6000 (8100)

FAA AIRCRAFT REGISTRY
CAMERA NO. 5H DATE: 2/11/82

MILRO

FAA AIRCRAFT REGISTRY
CAMERA NO. 5N DATE: 2/11/82

FEDERAL AVIATION AGENCY

AERONAUTICAL CENTER
P. O. Box 1082
Oklahoma City, Oklahoma 73101

Mar 29 1966

IN REPLY REFER TO: AC-354

Mooney Aircraft,Inc
Kerrville,Texas
Atta:Joe Schmerber

We have assigned registration marks N See list below to aircraft Mooney Model M20 C (Advise if not correct) which is being acquired by Mae*Aire Aviation Corporation.

Sincerely yours,

Lester G. Robinson

Lester G. Robinson, Chief
Aircraft Registration Branch
Data Services Division

N952MA to M-20C Serial # 3364
N953MA " " " " " #3372
N954MA " " " " " #3379
N955MA " " " " #3384

AC Form 1046 (1-65) Use previous edition.

FAA AC 65-997

FAA AIRCRAFT REGISTRY
CAMERA NO. 5N DATE: 2/11/82

MICRO

FAA AIRCRAFT REGISTRY
CAMERA NO. 5N DATE: 2/11/82

30 OCT 1969

FEDERAL AVIATION AGENCY

MAJOR REPAIR AND ALTERATION
(Airframe, Powerplant, Propeller, or Appliance)

Form Approved: Budget Bureau No. 04-R060.1

FOR FAA USE ONLY

OFFICE IDENTIFICATION

INSTRUCTIONS: Print or type all entries. See FAR 43.9, FAR 43 Appendix B, and AC 43.9-1 (or subsequent revision thereof) for instructions and disposition of this form.

1. AIRCRAFT	MAKE	MODEL
	SERIAL NO. Monney 3372	NATIONALITY AND REGISTRATION MARK N206 N957MA
2. OWNER	NAME (As shown on registration certificate) Robert Fanning- Donald Wilkinson	ADDRESS (As shown on registration certificate) P.O.Box 2121 Newburgh,N.Y.

3. FOR FAA USE ONLY

4. UNIT IDENTIFICATION / 5. TYPE

UNIT	MAKE	MODEL	SERIAL NO.	REPAIR	ALTERATION
AIRFRAME	(As described in item 1 above)			XX	
POWERPLANT					
PROPELLER					
APPLIANCE	TYPE / MANUFACTURER				

6. CONFORMITY STATEMENT

A. AGENCY'S NAME AND ADDRESS	B. KIND OF AGENCY	C. CERTIFICATE NO.
Harry C.Brown R.F.D.# 1 Box 258 Walden.N.Y.	X U.S. CERTIFICATED MECHANIC FOREIGN CERTIFICATED MECHANIC CERTIFICATED REPAIR STATION MANUFACTURER	IA288147

D. I certify that the repair and/or alteration made to the unit(s) identified in item 4 above and described on the reverse or attachments hereto have been made in accordance with the requirements of Part 43 of the U.S. Federal Aviation Regulations and that the information furnished herein is true and correct to the best of my knowledge.

DATE	SIGNATURE OF AUTHORIZED INDIVIDUAL
Oct.28-69	Harry C Brown

7. APPROVAL FOR RETURN TO SERVICE

Pursuant to the authority given persons specified below, the unit identified in item 4 was inspected in the manner prescribed by the Administrator of the Federal Aviation Agency and is ☐ APPROVED ☒ REJECTED

BY						
	FAA FLT. STANDARDS INSPECTOR		MANUFACTURER	X	INSPECTION AUTHORIZATION	OTHER (Specify)
	FAA DESIGNEE		REPAIR STATION		CANADIAN DEPARTMENT OF TRANSPORT INSPECTOR OF AIRCRAFT	

DATE OF APPROVAL OR REJECTION	CERTIFICATE OR DESIGNATION NO.	SIGNATURE OF AUTHORIZED INDIVIDUAL
Oct.28-69	IA288147	Harry C Brown

FAA Form 337 (1-65) OBSOLETE PREVIOUS EDITION 0052-025-8000 (8320)

FAA AIRCRAFT REGISTRY
CAMERA NO. 5N DATE: 2/11/82

NOTICE

Weight and balance or operating limitation changes shall be entered in the appropriate aircraft record. An alteration must be compatible with all previous alterations to assure continued conformity with the applicable airworthiness requirements.

8. DESCRIPTION OF WORK ACCOMPLISHED *(If more space is required, attach additional sheets. Identify with aircraft nationality and registration mark and date work completed.)*

Repair right wing tip
Install the following new parts
1 # 220000-148 tip skin
1 # 220000-146 skin
1 # 210047-504 rib

All work done in accordance to Mooney Specifacations

☐ ADDITIONAL SHEETS ARE ATTACHED

U.S. GOVERNMENT PRINTING OFFICE : 1965 OF—761-748

FAA AIRCRAFT REGISTRY
CAMERA NO. 5N DATE: 2/11/82

1092 1013 26 JUN 29 '66

FEDERAL AVIATION AGENCY

MAJOR REPAIR AND ALTERATION
(Airframe, Powerplant, Propeller, or Appliance)

Form Approved
Budget Bureau No. 04-R060.1

FOR FAA USE ONLY

OFFICE IDENTIFICATION ~~SW-GADO-10~~

INSTRUCTIONS: Print or type all entries. See FAR 43.9, FAR 43 Appendix B, and AC 43.9-1 (or subsequent revision thereof) for instructions and disposition of this form.

1. AIRCRAFT	MAKE: Mooney	MODEL: Mark 20C
	SERIAL NO.: 3372	NATIONALITY AND REGISTRATION MARK: N953WM
2. OWNER	NAME (As shown on registration certificate): Mooney Aircraft Inc.	ADDRESS (As shown on registration certificate): Kerrville, Texas

3. FOR FAA USE ONLY

Verified by Operator #6

4. UNIT IDENTIFICATION / **5. TYPE**

UNIT	MAKE	MODEL	SERIAL NO.	REPAIR	ALTERATION
AIRFRAME	(As described in item 1 above)				X
POWERPLANT					
PROPELLER					
APPLIANCE	TYPE / MANUFACTURER				

6. CONFORMITY STATEMENT

A. AGENCY'S NAME AND ADDRESS	B. KIND OF AGENCY	C. CERTIFICATE NO.
Charlie L. Bugosh c/o Bugosh Aircraft Serv. Co. Inc. Box 931, Kerrville, Texas	X U.S. CERTIFICATED MECHANIC FOREIGN CERTIFICATED MECHANIC CERTIFICATED REPAIR STATION MANUFACTURER	A&P 460254

D. I certify that the repair and/or alteration made to the unit(s) identified in item 4 above and described on the reverse or attachments hereto have been made in accordance with the requirements of Part 43 of the U.S. Federal Aviation Regulations and that the information furnished herein is true and correct to the best of my knowledge.

DATE	SIGNATURE OF AUTHORIZED INDIVIDUAL
4-18-66	Charlie L. Bugosh

7. APPROVAL FOR RETURN TO SERVICE

Pursuant to the authority given persons specified below, the unit identified in item 4 was inspected in the manner prescribed by the Administrator of the Federal Aviation Agency and is [X] APPROVED [ ] REJECTED

BY						
	FAA FLT. STANDARDS INSPECTOR	MANUFACTURER	X	INSPECTION AUTHORIZATION	OTHER (Specify)	
	FAA DESIGNEE	REPAIR STATION		CANADIAN DEPARTMENT OF TRANSPORT INSPECTOR OF AIRCRAFT		

DATE OF APPROVAL OR REJECTION	CERTIFICATE OR DESIGNATION NO.	SIGNATURE OF AUTHORIZED INDIVIDUAL
4-18-66	A&P 460254	Charlie L. Bugosh

FAA AIRCRAFT REGISTRY
CAMERA NO. 5N DATE: 2/11/82

NOTICE

Weight and balance or operating limitation changes shall be entered in the appropriate aircraft record. An alteration must be compatible with all previous alterations to assure continued conformity with the applicable airworthiness requirements.

8. DESCRIPTION OF WORK ACCOMPLISHED *(If more space is required, attach additional sheets. Identify with aircraft nationality and registration mark and date work completed.)*

Installed Electric gear retraction kit per Mooney dwg. # 950090-517
Wt. and bal. computed and compass checked.
Electrical load not affected.
E.W. 1593 lbs. E.W.C.G. 44.8 aft Useful Load 982 lbs.
---END---

☐ ADDITIONAL SHEETS ARE ATTACHED

FAA AIRCRAFT REGISTRY
CAMERA NO. 5N DATE: 2/11/82

37 JUN 20 1966

Form Approved
Budget Bureau No. 04-R060.1

FOR FAA USE ONLY

OFFICE IDENTIFICATION
SW-GADO-10

Assigned by Operator #4-5

FEDERAL AVIATION AGENCY

MAJOR REPAIR AND ALTERATION

1084 1037

(Airframe, Powerplant, Propeller, or Appliance)

INSTRUCTIONS: Print or type all entries. See FAR 43.9, FAR 43 Appendix B, and AC 43.9-1 (or subsequent revision thereof) for instructions and disposition of this form.

1. AIRCRAFT	MAKE: Mooney	MODEL: Mark 20C
	SERIAL NO.: 3372	NATIONALITY AND REGISTRATION MARK: N9530A
2. OWNER	NAME (As shown on registration certificate): Mooney Aircraft Inc.	ADDRESS (As shown on registration certificate): Kerrville, Texas

3. FOR FAA USE ONLY

4. UNIT IDENTIFICATION / 5. TYPE

UNIT	MAKE	MODEL	SERIAL NO.	REPAIR	ALTERATION
AIRFRAME	(As described in item 1 above)				X
POWERPLANT					
PROPELLER					
APPLIANCE	TYPE / MANUFACTURER				

6. CONFORMITY STATEMENT

A. AGENCY'S NAME AND ADDRESS	B. KIND OF AGENCY	C. CERTIFICATE NO.
Charlie L. Dugosh c/o Dugosh Aircraft Serv. Co. Inc. Box 931, Kerrville, Texas	X U.S. CERTIFICATED MECHANIC FOREIGN CERTIFICATED MECHANIC CERTIFICATED REPAIR STATION MANUFACTURER	A&P 460254

D. I certify that the repair and/or alteration made to the unit(s) identified in item 4 above and described on the reverse or attachments hereto have been made in accordance with the requirements of Part 43 of the U.S. Federal Aviation Regulations and that the information furnished herein is true and correct to the best of my knowledge.

DATE: 4-18-66

SIGNATURE OF AUTHORIZED INDIVIDUAL: Charlie L. Dugosh

7. APPROVAL FOR RETURN TO SERVICE

Pursuant to the authority given persons specified below, the unit identified in item 4 was inspected in the manner prescribed by the Administrator of the Federal Aviation Agency and is X APPROVED ☐ REJECTED

BY						
		FAA FLT. STANDARDS INSPECTOR		MANUFACTURER	X	INSPECTION AUTHORIZATION
		FAA DESIGNEE		REPAIR STATION		CANADIAN DEPARTMENT OF TRANSPORT INSPECTOR OF AIRCRAFT

OTHER (Specify)

DATE OF APPROVAL OR REJECTION	CERTIFICATE OR DESIGNATION NO.	SIGNATURE OF AUTHORIZED INDIVIDUAL
4-18-66	A&P 460254	Charlie L. Dugosh

FAA Form 337 (1-65) OBSOLETE PREVIOUS EDITION

0052-025-8000 (8320)

FAA AIRCRAFT REGISTRY
CAMERA NO. 5N DATE: 2/11/82

NOTICE

Weight and balance or operating limitation changes shall be entered in the appropriate aircraft record. An alteration must be compatible with all previous alterations to assure continued conformity with the applicable airworthiness requirements.

8. DESCRIPTION OF WORK ACCOMPLISHED (If more space is required, attach additional sheets. Identify with aircraft nationality and registration mark and date work completed.)

Installed 2 ea. Narco MK-12A ~~VOR~~-4 per Mooney dwg. # 810111-503
Installed Narco VP-10 broadband antenna per Mooney dwg. # 810020
Installed Narco VP-10 broadband antenna on top of fuselage forward of sta. 59.0 where Mooney factory antenna is mounted, fuselage skin was reinforced with .050 alum. plate rivisted to skin and stringers.
Wt. and bal. computed and compass checked.
Total continious electrical load is 30.85 amps this is less than 80 % of generator capacity which is 50 amps.

E.W. 1579 lbs E.W.C.G. 45.0 aft. Useful load 996 labs.

—END—

☐ ADDITIONAL SHEETS ARE ATTACHED

FAA AC 67 4091

FAA AIRCRAFT REGISTRY
CAMERA NO. 5N DATE: 2/11/82

1109-1075 31 AUG 4

FEDERAL AVIATION AGENCY

MAJOR REPAIR AND ALTERATION
(Airframe, Powerplant, Propeller, or Appliance)

Form Approved
Budget Bureau No. 04-R060.1

FOR FAA USE ONLY

OFFICE IDENTIFICATION

INSTRUCTIONS: Print or type all entries. See FAR 43.9, FAR 43 Appendix B, and AC 43.9-1 (or subsequent revision thereof) for instructions and disposition of this form.

1. AIRCRAFT	MAKE: Mooney	MODEL: Mark 20C
	SERIAL NO.: 3372	NATIONALITY AND REGISTRATION MARK: N 953MA
2. OWNER	NAME (As shown on registration certificate): Mac-Aire Aviation Corp.	ADDRESS (As shown on registration certificate): L.I. Mac Arthur Airport Ronkonkoma, New York

3. FOR FAA USE ONLY

4. UNIT IDENTIFICATION				5. TYPE	
UNIT	MAKE	MODEL	SERIAL NO.	REPAIR	ALTERATION
AIRFRAME	(As described in item 1 above)				X
POWERPLANT					
PROPELLER					
APPLIANCE	TYPE / MANUFACTURER				

6. CONFORMITY STATEMENT

A. AGENCY'S NAME AND ADDRESS	B. KIND OF AGENCY	C. CERTIFICATE NO.
Lawrence Hurne P.O. Box 865 Lake Ronkonkoma, New York 11779	X U.S. CERTIFICATED MECHANIC FOREIGN CERTIFICATED MECHANIC CERTIFICATED REPAIR STATION MANUFACTURER	1652774

D. I certify that the repair and/or alteration made to the unit(s) identified in item 4 above and described on the reverse or attachments hereto have been made in accordance with the requirements of Part 43 of the U.S. Federal Aviation Regulations and that the information furnished herein is true and correct to the best of my knowledge.

DATE	SIGNATURE OF AUTHORIZED INDIVIDUAL
July 1, 1966	Lawrence John Hurne

7. APPROVAL FOR RETURN TO SERVICE

Pursuant to the authority given persons specified below, the unit identified in item 4 was inspected in the manner prescribed by the Administrator of the Federal Aviation Agency and is ☐ APPROVED ☐ REJECTED

BY						OTHER (Specify)
	X	FAA FLT. STANDARDS INSPECTOR		MANUFACTURER		INSPECTION AUTHORIZATION	Verified by Operator #45
		FAA DESIGNEE		REPAIR STATION		CANADIAN DEPARTMENT OF TRANSPORT INSPECTOR OF AIRCRAFT	

DATE OF APPROVAL OR REJECTION	CERTIFICATE OR DESIGNATION NO.	SIGNATURE OF AUTHORIZED INDIVIDUAL
7-2-66	EA-GA80-V	J Ladice

FAA Form 337 (1-65) OBSOLETE PREVIOUS EDITION

0052-025-8000 (8320)

FAA AIRCRAFT REGISTRY
CAMERA NO. 5N DATE: 2/11/82

NOTICE

Weight and balance or operating limitation changes shall be entered in the appropriate aircraft record. An alteration must be compatible with all previous alterations to assure continued conformity with the applicable airworthiness requirements.

8. DESCRIPTION OF WORK ACCOMPLISHED *(If more space is required, attach additional sheets. Identify with aircraft nationality and registration mark and date work completed.)*

Installed NARCO MBT-R marker beacon receiver.

1. Entry made in aircraft equipment list to include this addition in equipment. MBT three light unit mounted in instrument panel in holes provided by Mooney. MBT remote unit receiver placed in glove box and secured to the side with a metal strap. Metal reinforcement put on opposite side of glove box. All cables tied securely behind instrument panel. Antenna mounted on bottom of fuselage, reinforced by existing aircraft stringers.

2. Aircraft equipped with 50 amp generator. Total continuous electrical load is within 80% of generator capacity.

3. ~~New Empty Wt. 1580 lbs. E.W.C.G. 45.1 Useful Load 995 lbs.~~
New Empty Wt. 1594 lbs. E.W.C.G. 44.8 Useful Load 981 lbs.

4. Compass swung with unit operating.

END

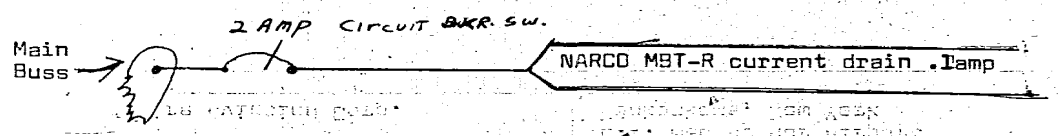

☐ ADDITIONAL SHEETS ARE ATTACHED

U.S. GOVERNMENT PRINTING OFFICE : 1965 OF—761-748